ATLAS® brand blind threaded inserts provide strong and reusable permanent threads in sheet materials where only one side is accessible for hardware installation.

CATALOG

ATLAS® BLIND THREADED INSERTS

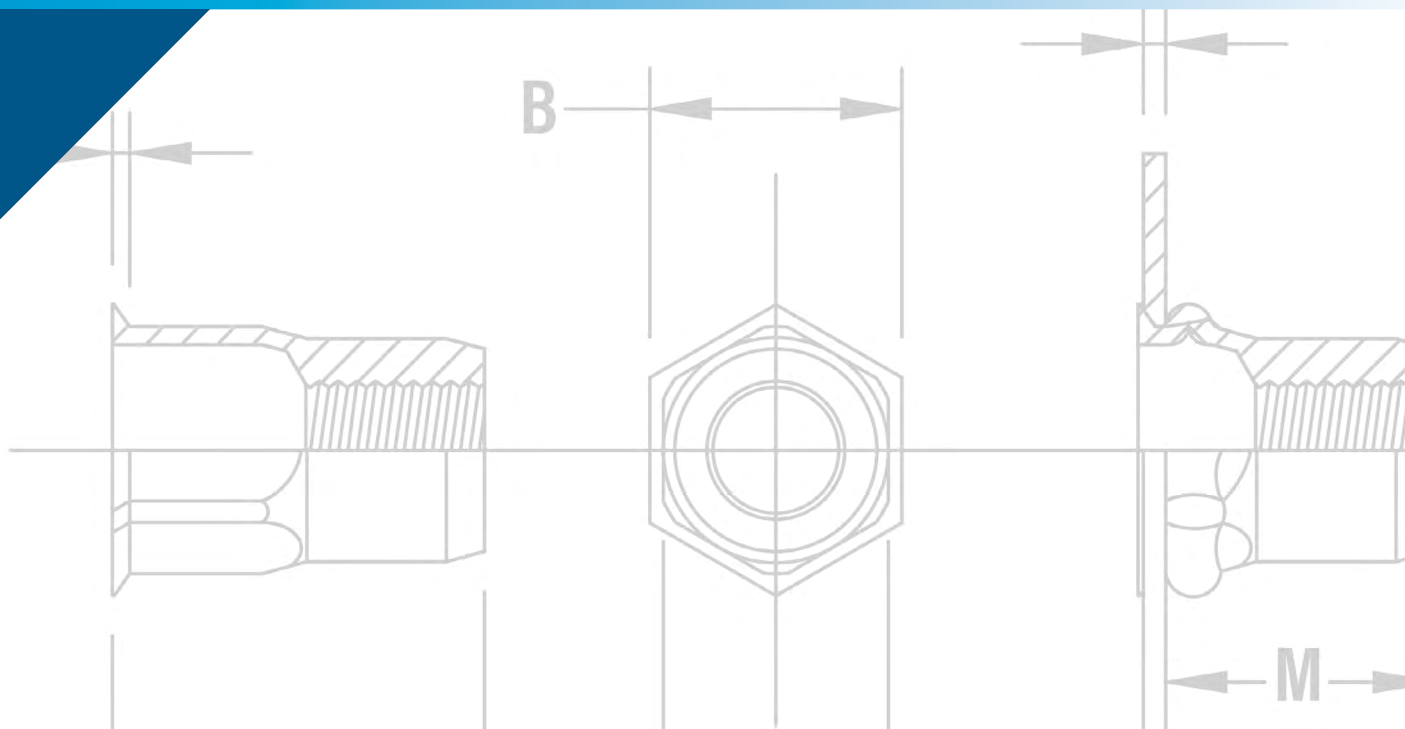

INDEX

Company Info and Capabilities 4-5

ATLAS® Blind Threaded Inserts and Studs Overview 6

ATLAS® Insert Design Guide 7-9

SpinTite® Blind Threaded Inserts

AEL™ LOW-PROFILE HEAD INSERTS 10
- Feature a large diameter, low-profile head and knurled shank
- Offers highest all around strength

AEK™ MINIMIZED-PROFILE HEAD INSERTS 11
- Same as the AEL but with a minimized-profile head
- Allows near-flush installations with no need for special hole preparations such as countersinking or dimpling

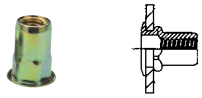

AEH™ HALF-HEX SHANK LOW PROFILE HEAD INSERTS 12
- Features a hex body design
- Improved torque-out resistance

AEO™ THIN-WALL LOW PROFILE HEAD INSERTS 13
- Features a low profile head design
- Achieves near-flush installations with no need for countersink drilling or dimpling of the parent material

AET™ AND AEW™ 360° SWAGING LOW-PROFILE HEAD INSERTS 14-15
- Works in any thickness over .029" / 0.76 mm including blind hole
- High resistance to torque out
- Minimal backside protrusion for restricted space applications

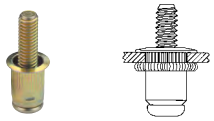

AES™ BLIND THREADED STUDS 16
- Provide strong external threads in blind applications
- Easy to install using spin-spin tooling
- Optional anti cross-threading feature available (see page 25)

SpinTite® PERFORMANCE DATA 17-18

ATLAS® FM™ Full Metric Blind Threaded Inserts

AETH™ THIN HEAD SEMIHEX BODY HEX COUNTERBORE INSERTS 19
- Allows near-flush installations with no need for special hole preparations.
- Semihex body for improved torque-out resistance.

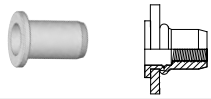

AEFR™ FLAT HEAD ROUND BODY INSERTS 20
- Flat head design for high load applications.

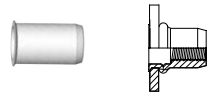

AETR™ THIN HEAD ROUND BODY INSERTS 20
- Allows near-flush installations with no need for special hole preparations.

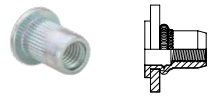

AEFK™ FLAT HEAD KNURLED ROUND BODY INSERTS 21
- Flat head design for high load applications.
- Knurled body for high torque applications.

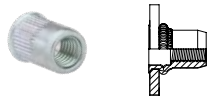

AETK™ THIN HEAD KNURLED ROUND BODY INSERTS 21
- Allows near-flush installations with no need for special hole preparations.
- Knurled body for high torque applications.

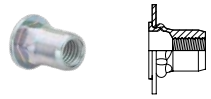

AEFH™ FLAT HEAD SEMIHEX BODY HEX COUNTERBORE INSERTS 22
- Flat head design for high load applications.
- Semihex body for improved torque-out resistance.

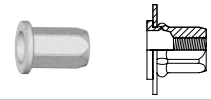

AEFHH™ FLAT HEAD HEX BODY ROUND COUNTERBORE INSERTS 22
- Flat head design for high load applications.
- Full hex feature for high torque applications.

© 2019 PennEngineering.

INDEX

AETHH™ THIN HEAD HEX BODY ROUND COUNTERBORE INSERTS 23
- Allows near-flush installations with no need for special hole preparations.
- Full hex feature for high torque applications.

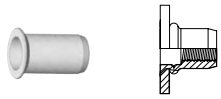

AECR™ COUNTERSUNK HEAD ROUND BODY INSERTS 23
- Countersunk head allows insert to be installed flush with sheet surface.

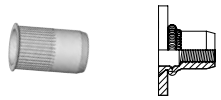

AECK™ COUNTERSUNK HEAD KNURLED ROUND BODY INSERTS 24
- Countersunk head allows insert to be installed flush with sheet surface.
- Knurled body for high torque applications.

ATLAS® FM™ MATERIAL AND FINISH SPECIFICATIONS 24

ATLAS® Plus+Tite® Blind Threaded Inserts

DESIGNED FOR SUPERIOR PULLOUT RESISTANCE IN PLASTICS AND THIN SHEET METAL 26-27
- Internal formed threads are compatible with unified grade 5 or metric class 9.8 screws
- Shoulder provides self-locating feature
- All surfaces are plated for superior corrosion resistance

ATLAS® MaxTite® Blind Threaded Inserts

DESIGNED FOR HIGH LOAD APPLICATIONS 28-31
- Thread sizes 632 - 1/2" and M4 - M12
- Countersunk feature allow fastener to be installed flush with the surface of the sheet
- Available with rib, key or full hex features for high torque applications

MaxTite® PERFORMANCE DATA 32

MaxTite® SPECIFICATIONS AND INSTALLATION 33

ATLAS® Standard Full-hex Threaded Inserts

STANDARD FULL-HEX 34
- Designed for high load applications
- Standard hex feature for high torque applications

Installation Tools 35-49

Tool Selector Guide 50

NAS Part Number Key 51

SpinTite®, ATLAS® FM™ and MaxTite® Part Number Keys 52-54

General Conversion Charts 55

COMPANY

ATLAS® operations are headquartered within the PennEngineering 225,000 square foot facility located in Danboro, Pennsylvania. PennEngineering companies provide fastener and fastener installation design and product solutions worldwide for diverse industries, including electronics, computer, data/telecom, medical, automotive, marine, aircraft, and general manufacturing.

CAPABILITIES

Application Engineering Services

From our factories or in the field we can provide you with application analysis/review, 3D modeling, product samples, on-site training and total engineering support.

Comprehensive website

Our PEMNET.com fastening resource center provides the tools to help you determine which type of ATLAS® blind threaded insert or installation tool is right for you. It includes a complete CAD library, fastener selector tool, conversion tables, tutorials/animations/ videos, literature, tech help, and environmental compliance references.

Custom Designs

Our engineers can assist you in finding the most efficient solution to your application, and design the right fastener to meet your needs.

Installation Tools

We can assess your application and recommend equipment that helps you achieve your lowest installed cost. Systems can be developed to address challenging component handling and fastener installation.

Prototype Development

We're equipped with the latest equipment to provide prototype samples and short run production quantities for your testing and analysis.

Technical Lab

We have comprehensive testing facilities in each of our manufacturing locations. Our trained technicians worldwide can perform testing and provide complete analysis on pushout, pullout, spinout and assembly torque.

QUALITY

At PennEngineering, our goal is 100% defect-free product. To this end, we have adopted a manufacturing strategy of defect prevention rather than defect detection. We use statistical tools throughout our manufacturing processes to monitor the performance and assure effective quality control of each process step. If a non-conforming situation arises, it is resolved immediately with the use of appropriate quality assurance tools.

Our fastener quality management system is IATF 16949 registered and Department of Defense QSLM approved, and we can support DFARS clause 252.225 requirements when specified. This further underscores our commitment to excellence as we continue to provide quality products and services that meet or exceed our customers' expectations.

We are members of the Automotive Industry Action Group (AIAG) where we work together with other member companies to resolve issues critical to the automotive supply chain.

PennEngineering is also a registered member of the International Material Data System (IMDS).

ATLAS® BLIND THREADED INSERTS AND STUDS OVERVIEW

ATLAS® Blind threaded inserts are designed to provide strong threads in thin panel sections. They are called "blind" because they can be installed from one side of the panel. Access to both sides is not required. This convenient feature makes these fasteners ideally suited for tubing, extrusion, and other similar types of applications.

There are four types: **SpinTite®**, **ATLAS® FM™**, **MaxTite®**, and **Plus+Tite®** fasteners.

The **SpinTite®** types are used for most applications where strong threads are required for blind applications. They are installed from one side using a spin-spin technique. In addition to high thread strength and torque-out, these fasteners have minimal inventory requirements since each size can accommodate many grip ranges (material thickness).

The **ATLAS® FM™** inserts have metric threads and dimensions and install into metric size round or hex holes to meet European design standards. These inserts are installed using "spin-pull" or "pull-to-pressure" installation tools.

The heavy duty **MaxTite®** types are designed for the most demanding applications. They are installed from one side using "spin-pull" or "pull-to-pressure" installation tools.

The blind **Plus+Tite®** inserts feature a slotted body that folds into four petals upon installation, gripping the backside of the parent material. These inserts can be installed into single, variable, or multiple thickness materials.

Typical industries that use blind threaded rivet technology:

- Appliances
- Automobiles and accessories
- Aviation and aerospace
- Electronics
- Food service equipment
- Furniture/fixtures/signs
- Industrial equipment
- Lawn and garden equipment
- Lighting
- Marine/boating
- Medical equipment
- Military equipment
- Recreational equipment
- Trucks and trailers

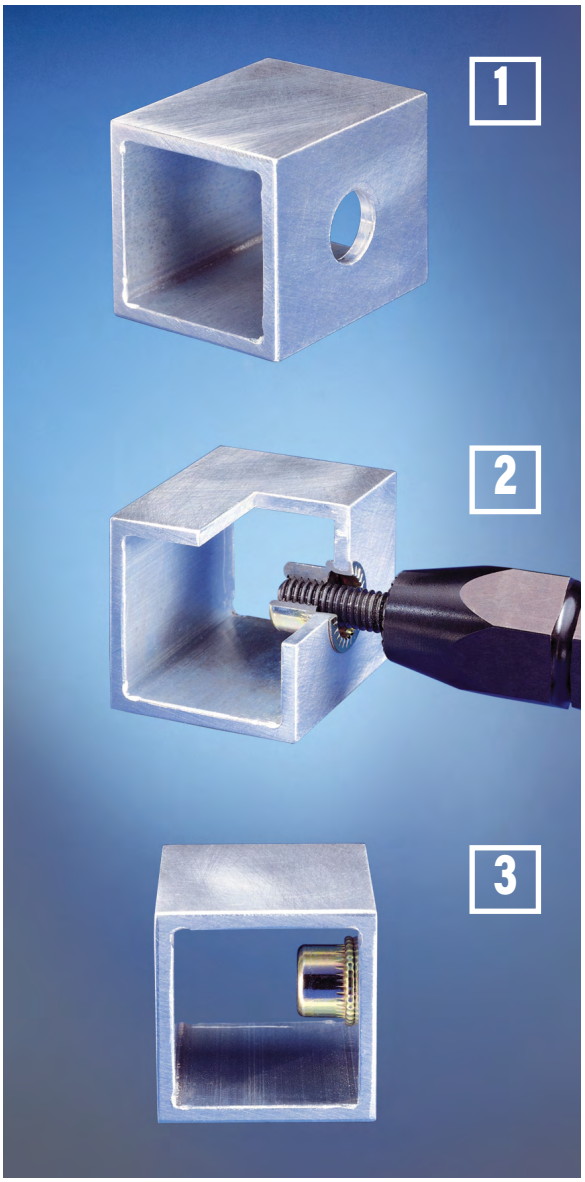

Advantages of ATLAS® blind threaded inserts:

- Provide strong permanent threads in thin material.
- Can be installed quickly and easily in panel sections with limited or no access to the back side.
- Can be installed in close-to-edge applications.
- Allow easy attachment to panels of any hardness such as metal, plastics, and fiberglass.
- Installed with light, compact, cost-effective tooling.
- Can assemble multiple dissimilar materials during installation.
- Can replace weld nuts, cage nuts, tapped holes, self-tapping screws, and traditional through-bolted applications with loose hardware.
- Stocked globally through our worldwide distribution network.

Application Examples

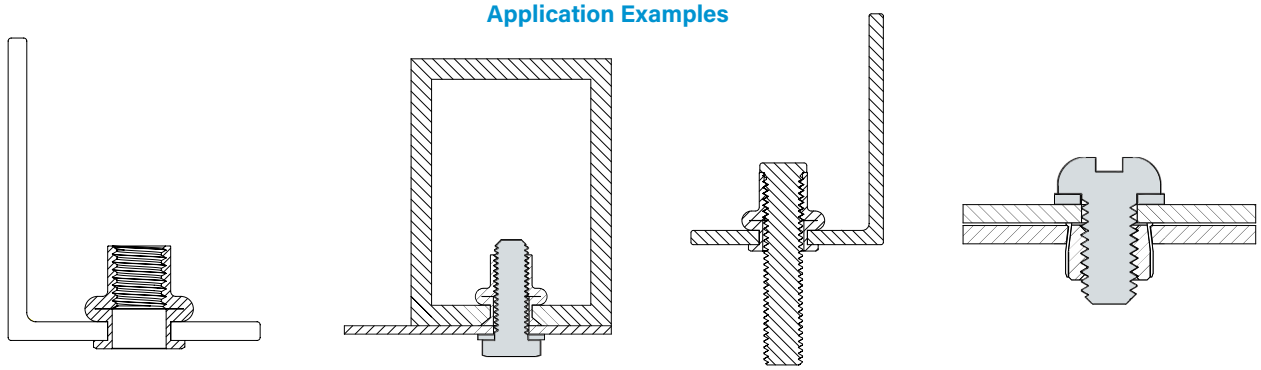

Application considerations

- Panel material is not limited by hardness or type, but hole location and thickness must fall within the grip range of the specified fastener.
- Hole locations are important when it comes to clearance on both the front side and back side of the panel. Allow adequate room for the head of the fastener, the bulbed portion of the fastener, as well as access for your chosen installation tooling. Also allow enough depth behind the panel to accept the fastener prior to the installation process.

Mounting hole considerations

- Mounting holes can be prepared in many ways, but must be within the tolerances specified in the catalog or on the drawing.
- Methods of hole preparation include but are not limited to punching, drilling, milling, laser or water jet cutting, and casting. Also available are the portable RIV990 and RIV991 hex cutter tools, used to transform round holes into hexagonal holes. See page 46 for more information.
- Mounting holes do not necessarily need to be de-burred, but must allow for the fastener to seat properly and maintain position or perpendicularity when installed.

Picking the insert

- **Round vs. Hex -** For many applications a round insert such as the AEL or AEK series parts will suffice. Properly installed, these inserts will provide all the necessary spin out resistance. In critical applications, a hex hole may be desired as insurance against spin out. The RIV990 or RIV991 hex cutter tool can be used to create a hex hole in tubing. Tooling is only available for creating holes for the ATLAS® FM™ inserts.
- **Plating -** ATLAS inserts are available in a variety of platings. For normal applications, the standard zinc yellow or zinc clear is adequate. All ATLAS zinc platings are RoHS and REACH compliant. See www.pemnet.com for compliance certifications. For more extreme environments, the use of zinc nickel or tin zinc coatings may be desired. These coatings are rated for 1,000 hours salt spray protection per ASTM B117.
- **Watertight -** For applications on the exterior of vehicles or electronic cabinets that will be used outdoors, a PVC or Rimlex® (high temperature) sealant can be added under the head of the fastener. Normally a closed end insert is used for these applications. In most normal conditions this combination will provide a watertight or air tight seal. Sealant under head can reduce the effective grip range of the insert by .020" - .030" (0.5 - 0.76 mm).

- **Stud -** Inserts that have a male thread are available. These inserts are useful when used to mount a plate or cover that can be hung over the studs for ease of assembly.
- **Stainless Steel -** For extreme environments, the use of stainless steel may be required. All MaxTite® inserts are available in both 316 Stainless Steel and 430 Stainless Steel. While our SpinTite® parts can be manufactured in Stainless Steel, we recommend that the ATLAS FM™ designs be used for commercial applications since the body sizes are slightly smaller in diameter. This simplifies manufacturing and can dramatically decrease the piece price.
- **Thread Considerations -** Our catalog shows the most popular thread sizes. Even if not shown, other sizes are available such as 10-24, ¼-28 and 3/8-24. Minimum order quantities may apply.

  SpinTite®, Plus+Tite® and ATLAS® FM™ are Unified 2B and Metric 6H thread classes. MaxTite parts are Unified 3B and Metric 6H. Our fastener threads are compliant with these classes before they are installed but dependent upon the condition of the mandrel and the tool pressure and/ or other application considerations could have adverse reactions to the after installed condition and gaugeability of the threads.

  AET and AEW Swaging Inserts are tapped oversized to compensate for thread portion shrinkage during the installation process. They are not gaugeable prior to or after installation but will be compatible with Class 2A or 3A or Metric 6g screws after installation.
- **Insert removal –** Sometimes the insert has to be removed after it is installed for variety of reasons. When removal is required, the best method is to remove the fastener head. This can be accomplished by using an oversized drill bit and gently drilling into the counterbore until the head is removed. Then the body of the insert can be pushed through the mating material. Using a grinding wheel to carefully remove the head is another option.

Installation Tooling

- **Spin-spin –** These tools work by running the mandrel into the insert until the air motor stalls. The rpm of the tool needs to be matched to the size of the insert. See the ATLAS tool selector guide for recommended tool models and air pressures. An air pressure regulator is always recommended.

- **Spin-pull –** These tools use a small air motor to place the insert on the mandrel. Insert the fastener into the mating hole and pull the trigger. The tool will axially pull the mandrel back to a pre-adjusted distance and then the air motor engages in reverse to complete the installation.

- **Pull-to-pressure –** Similar to spin-pull but with the addition of a pressure transducer that when adjusted properly, will sense the correct fastener installation and then complete the cycle. These tools are state-of-the-art for insert installation tools as they can properly install inserts across the full grip range quickly and consistently.

Rimlex® is a registered trademark of Inlex Locking Ltd.

As with all air tools, the correct air pressure is critical to proper operation. Air pressure regulators are always recommended. 90-100 psi is the recommended maximum pressure for all tools. Please see the ATLAS catalog for recommended air pressures for our spin-spin tools. The spin-pull and pull-to-pressure tools should always be operated in the range of 85-100 psi.

Air tools in a manufacturing environment will wear and need repair from time to time. Please see the ATLAS website for a list of authorized tool repair locations. ATLAS tools have a one year warranty for manufacturing defects. Parts and labor are covered.

When a very large number of inserts have to be installed repetitively, the use of robotics or automation may be necessary. Please contact us to discuss the application details and possible custom solutions.

Mating part/bolts

- Installation holes for ATLAS blind rivet nuts should be aligned to parent material to ensure a uniform backside formation. The hole size should meet the product tolerance and specification. The mating part should contact the head of the blind rivet nut to ensure optimum torque performance of the joint.
- The mating screw should be Grade 5 or Metric Class 8.8 strength. ATLAS blind rivet nuts are designed to meet the torque, tensile and clamp load of the mating fasteners. Thread fit may be 2A, 3A or Metric 6G design. The mating screw thread length should engage all threads of the blind rivet nut to ensure optimum torque strength.
- If an application requires a mating screw with a nylon patch, adhesive, or other thread locking mechanism, a hex body blind rivet nut in a hex hole will be needed to resist the prevailing torque created by the locking mechanism.

Test Guidelines

SPINOUT

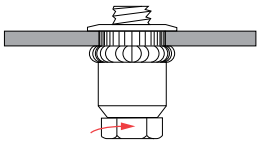

Spinout is the measure of the torsional holding power of the fastener in the parent material after installation without inducing clamp load on the fastener.

APPLICATION TORQUE

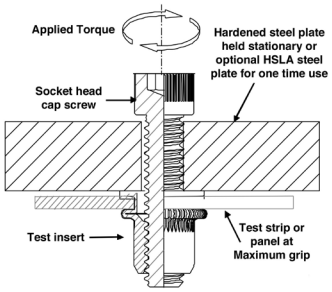

Application Torque is the torque strength achieved by gradual tightening torque to failure of the insert in application.

PUSHOUT

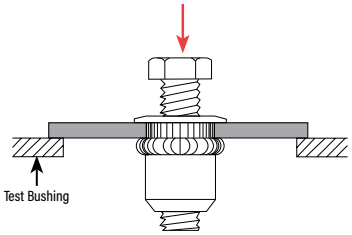

Pushout is the force required to push the insert through the sheet.

PULLOUT

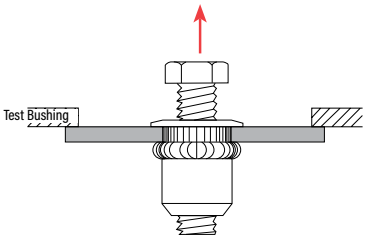

Pullout is the force required to pull the insert from the sheet.

INSTALLATION LOAD

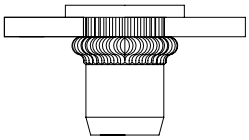

Installation Load is the force required to collapse (bulb) the insert in the specified grip range (thickness of application).

Because of the variables regarding lubrication, plating, type and class of testing screw or bolt, we recommend that pilot testing should be conducted per the customer specific application requirements to achieve optimum performance values.

AEL™ SpinTite® LOW-PROFILE HEAD INSERTS

- **Feature a large diameter, low-profile head and knurled shank.**
- **Offers highest all around strength.**

Now available in stainless steel

For recommended installation tool, see tool selector guide on page 50.

OPEN END

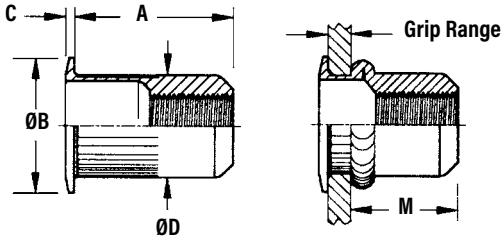

CLOSED END

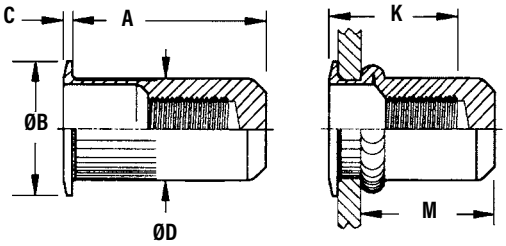

All dimensions are in inches.

Thread Size (1)	Part Number (2)	Grip Range (1)	Open						Closed							Hole Size In Sheet +.006 -.000
			A ±.015	ØB ±.015	C Nom.	ØD Max.	M Ref.	Weight lbs./1000	A ±.015	ØB ±.015	C Nom.	ØD Max.	K Min.	M Ref.	Weight lbs./1000	
#6-32	AELS8-632-80	.020 - .080	.420	.390	.030	.265	.305	3.52	.740	.390	.030	.265	.43	.640	6.89	.266
#6-32	AELS8-632-130	.080 - .130	.470	.390	.030	.265	.305	3.77	.740	.390	.030	.265	.43	.580	6.78	.266
#8-32	AELS8-832-80	.020 - .080	.420	.390	.030	.265	.305	3.31	.740	.390	.030	.265	.43	.640	7.20	.266
#8-32	AELS8-832-130	.080 - .130	.470	.390	.030	.265	.305	3.40	.740	.390	.030	.265	.43	.580	7.04	.266
#10-32	AELS8-1032-130	.020 - .130	.475	.415	.030	.296	.315	4.62	.990	.415	.030	.296	.58	.845	11.63	.297
#10-32	AELS8-1032-225	.130 - .225	.585	.415	.030	.296	.315	4.83	.990	.415	.030	.296	.58	.735	10.49	.297
1/4-20	AELS8-420-165	.027 - .165	.580	.500	.030	.390	.380	9.26	1.190	.500	.030	.390	.70	1.005	29.30	.391
1/4-20	AELS8-420-260	.165 - .260	.680	.500	.030	.390	.380	9.39	1.190	.500	.030	.390	.70	.905	21.53	.391
5/16-18	AELS8-518-150	.027 - .150	.690	.685	.035	.530	.470	19.51	1.390	.685	.035	.530	.82	1.175	53.76	.531
5/16-18	AELS8-518-312	.150 - .312	.805	.685	.035	.530	.425	19.80	1.390	.685	.035	.530	.82	1.025	53.25	.531
3/8-16	AELS8-616-150	.027 - .150	.690	.685	.035	.530	.470	16.81	1.390	.685	.035	.530	.83	1.175	45.23	.531
3/8-16	AELS8-616-312	.150 - .312	.805	.685	.035	.530	.425	17.36	1.390	.685	.035	.530	.83	1.025	44.92	.531
1/2-13	AELS8-813-200	.063 - .200	1.150	.865	.047	.685	.850	48.02	1.960	.865	.047	.685	1.10	1.665	50.65	.688
1/2-13	AELS8-813-350	.200 - .350	1.300	.865	.047	.685	.850	51.65	1.960	.865	.047	.685	1.10	1.515	54.40	.688
1/2-13	AELS8-813-500	.350 - .500	1.450	.865	.047	.685	.850	54.60	1.960	.865	.047	.685	1.10	1.315	57.49	.688

All dimensions are in millimeters.

Thread Size x Pitch (1)	Part Number (2)	Grip Range (1)	Open						Closed							Hole Size In Sheet +0.15
			A ±0.38	ØB ±0.38	C Nom.	ØD Max.	M Ref.	Weight kg/1000	A ±0.38	ØB ±0.38	C Nom.	ØD Max.	K Min.	M Ref.	Weight kg/1000	
M4 x 0.7	AELS8-470-2.0	0.5 - 2	10.67	9.91	0.76	6.73	7.75	1.73	18.8	9.91	0.76	6.73	11.6	16.26	3.37	6.75
M4 x 0.7	AELS8-470-3.3	2 - 3.3	11.94	9.91	0.76	6.73	7.75	1.56	18.8	9.91	0.76	6.73	11.6	14.73	3.3	6.75
M5 x 0.8	AELS8-580-3.3	0.5 - 3.3	12.07	10.54	0.76	7.52	8	2.19	25.15	10.54	0.76	7.52	15.6	21.46	5.38	7.6
M5 x 0.8	AELS8-580-5.7	3.3 - 5.7	14.86	10.54	0.76	7.52	8	2.16	25.15	10.54	0.76	7.52	15.6	18.67	4.86	7.6
M6 x 1	AELS8-610-4.2	0.7 - 4.2	14.73	12.7	0.76	9.91	9.65	3.97	30.23	12.7	0.76	9.91	17.5	25.53	11.3	10
M6 x 1	AELS8-610-6.6	4.2 - 6.6	17.27	12.7	0.76	9.91	9.65	4.29	30.23	12.7	0.76	9.91	17.5	22.99	10.24	10
M8 x 1.25	AELS8-8125-3.8	0.7 - 3.8	17.53	17.4	0.89	13.46	11.94	8.5	35.31	17.4	0.89	13.46	20.2	29.85	24.35	13.5
M8 x 1.25	AELS8-8125-7.9	3.8 - 7.9	20.45	17.4	0.89	13.46	10.8	9.13	35.31	17.4	0.89	13.46	20.2	26.04	23.93	13.5
M10 x 1.5	AELS8-1015-3.8	0.7 - 3.8	17.53	17.4	0.89	13.46	11.94	7.13	35.31	17.4	0.89	13.46	20.8	29.85	20.62	13.5
M10 x 1.5	AELS8-1015-7.9	3.8 - 7.9	20.45	17.4	0.89	13.46	10.8	8.11	35.31	17.4	0.89	13.46	20.8	26.04	20.48	13.5
M12 x 1.75	AELS8-12175-5.1	1.6 - 5.1	29.21	21.97	1.19	17.4	21.59	21.78	49.78	21.97	1.19	17.4	17.94	42.29	22.97	17.47
M12 x 1.75	AELS8-12175-8.9	5.1 - 8.9	33.02	21.97	1.19	17.4	21.59	23.43	49.78	21.97	1.19	17.4	27.94	38.48	24.66	17.47

(1) Additional grip ranges and fine thread sizes such as 10-24, 1/4-28 and 3/8-24 are available. Minimum order quantities may apply.

(2) For closed end, add a "B" to the end of the part number.

ALSO AVAILABLE

AEL and AEK inserts are available in MONEL® alloy 400. AEL inserts are also available in wedge head, or sealed head styles (see page 25).

Call for availability.

MONEL® is a registered trademark of Special Metals Corporation.

Part Number Designation

AEL S 8 - 632 - 80 B

- AEL → Type
- S → Material
- 8 → Finish
- 632 → Thread Code
- 80 → Max. Grip
- B → Closed End Designation

SEE PAGE 52 FOR MORE DETAIL

AEK™ SpinTite® MINIMIZED-PROFILE HEAD INSERTS

- **Feature a minimized-profile head and knurled shank.**
- **Allows near-flush installations with no need for special hole preparations such as countersinking or dimpling.**

Now available in stainless steel

For recommended installation tool, see tool selector guide on page 50.

OPEN END

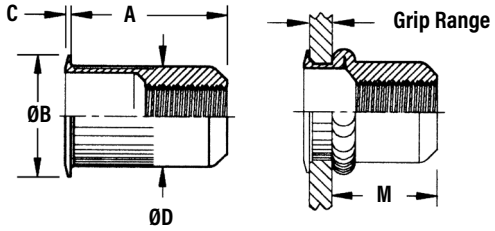

CLOSED END

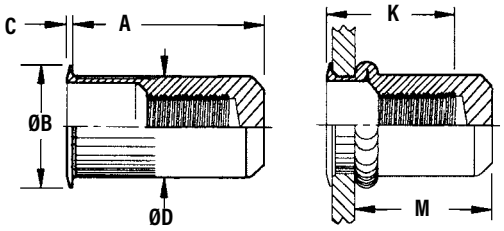

All dimensions are in inches.

Thread Size (1)	Part Number (2)	Grip Range (1)	Open						Closed							Hole Size In Sheet +.006 -.000
			A ±.015	ØB ±.015	C Nom.	ØD Max.	M Ref.	Weight lbs./1000	A ±.015	ØB ±.015	C Nom.	ØD Max.	K Min.	M Ref.	Weight lbs./1000	
#6-32	AEKS8-632-80	.020 - .080	.420	.310	.019	.265	.305	3.5	.740	.310	.019	.265	.43	.640	5.24	.266
#6-32	AEKS8-632-130	.080 - .130	.470	.310	.019	.265	.305	3.44	.740	.310	.019	.265	.43	.580	5.06	.266
#8-32	AEKS8-832-80	.020 - .080	.420	.310	.019	.265	.305	3.3	.740	.310	.019	.265	.43	.640	5.75	.266
#8-32	AEKS8-832-130	.080 - .130	.470	.310	.019	.265	.305	3.11	.740	.310	.019	.265	.43	.580	5.57	.266
#10-32	AEKS8-1032-130	.020 - .130	.475	.340	.019	.296	.315	3.99	.990	.340	.019	.296	.58	.845	10.93	.297
#10-32	AEKS8-1032-225	.130 - .225	.585	.340	.019	.296	.315	4.39	.990	.340	.019	.296	.58	.735	10.59	.297
1/4-20	AEKS8-420-165	.027 - .165	.580	.455	.022	.390	.380	8.59	1.190	.455	.022	.390	.70	1.005	23.4	.391
1/4-20	AEKS8-420-260	.165 - .260	.680	.455	.022	.390	.380	8.69	1.190	.455	.022	.390	.70	.905	21.2	.391
5/16-18	AEKS8-518-150	.027 - .150	.690	.595	.022	.530	.470	17.98	1.390	.595	.022	.530	.82	1.175	55.62	.531
5/16-18	AEKS8-518-312	.150 - .312	.805	.595	.022	.530	.425	19.27	1.390	.595	.022	.530	.82	1.025	55.11	.531
3/8-16	AEKS8-616-150	.027 - .150	.690	.595	.022	.530	.470	15.58	1.390	.595	.022	.530	.83	1.175	41.18	.531
3/8-16	AEKS8-616-312	.150 - .312	.805	.595	.022	.530	.425	16.28	1.390	.595	.022	.530	.83	1.025	39.64	.531

All dimensions are in millimeters.

Thread Size x Pitch (1)	Part Number (2)	Grip Range (1)	Open						Closed							Hole Size In Sheet +0.15
			A ±0.38	ØB ±0.38	C Nom.	ØD Max.	M Ref.	Weight kg/1000	A ±0.38	ØB ±0.38	C Nom.	ØD Max.	K Min.	M Ref.	Weight kg/1000	
M4 x 0.7	AEKS8-470-2.0	0.5 - 2	10.67	7.87	0.48	6.73	7.75	1.5	18.8	7.78	0.48	6.73	11.6	16.26	2.61	6.75
M4 x 0.7	AEKS8-470-3.3	2 - 3.3	11.94	7.87	0.48	6.73	7.75	1.44	18.8	7.87	0.48	6.73	11.6	14.73	2.53	6.75
M5 x 0.8	AEKS8-580-3.3	0.5 - 3.3	12.07	8.64	0.48	7.52	8	1.81	25.15	8.64	0.48	7.52	15.6	21.46	4.96	7.6
M5 x 0.8	AEKS8-580-5.7	3.3 - 5.7	14.86	8.64	0.48	7.52	8	1.99	25.15	8.64	0.48	7.52	15.6	18.67	4.8	7.6
M6 x 1	AEKS8-610-4.2	0.7 - 4.2	14.73	11.56	0.55	9.91	9.65	3.9	30.23	11.56	0.55	9.91	17.5	25.53	10.61	10
M6 x 1	AEKS8-610-6.6	4.2 - 6.6	17.27	11.56	0.55	9.91	9.65	3.94	30.23	11.56	0.55	9.91	17.5	22.99	9.62	10
M8 x 1.25	AEKS8-8125-3.8	0.7 - 3.8	17.53	15.11	0.55	13.46	11.94	8.04	35.31	15.11	0.55	13.46	20.2	29.85	25.23	13.5
M8 x 1.25	AEKS8-8125-7.9	3.8 - 7.9	20.45	15.11	0.55	13.46	10.8	8.79	35.31	15.11	0.55	13.46	20.2	26.04	25	13.5
M10 x 1.5	AEKS8-1015-3.8	0.7 - 3.8	17.53	15.11	0.55	13.46	11.94	6.66	35.31	15.11	0.55	13.46	20.8	29.85	18.68	13.5
M10 x 1.5	AEKS8-1015-7.9	3.8 - 7.9	20.45	15.11	0.55	13.46	10.8	6.93	35.31	15.11	0.55	13.46	20.8	26.04	17.98	13.5

(1) Additional grip ranges and fine thread sizes such as 10-24, 1/4-28 and 3/8-24 are available. Minimum order quantities may apply.
(2) For closed end, add a "B" to the end of the part number.

MATERIAL & FINISH SPECIFICATIONS

Type	Threads	Standard Material	Standard Finish
AELS / AEKS	Unified, 2B per ASME B1.1 Metric, 6H per ASME B1.13M	Low Carbon Steel	RoHS Compliant Zinc Yellow Plus Lubricant
AELC / AEKC	Unified, 2B per ASME B1.1 Metric, 6H per ASME B1.13M	Stainless Steel	Passivated and/or tested per ASTM A380
AELA / AEKA	Unified, 2B per ASME B1.1 Metric, 6H per ASME B1.13M	Aluminum	No finish
AELB / AEKB	Unified, 2B per ASME B1.1 Metric, 6H per ASME B1.13M	Brass	No finish

Part Number Designation

AEK S 8 - 632 - 80 B

Type | Material | Finish | Thread Code | Max. Grip | Closed End Designation

SEE PAGE 52 FOR MORE DETAIL

AEH™ SpinTite® HALF-HEX SHANK LOW-PROFILE HEAD INSERTS

- **Feature a hex body design.**
- **Improved torque-out resistance.**

Now available in stainless steel

For recommended installation tool, see tool selector guide on page 50.

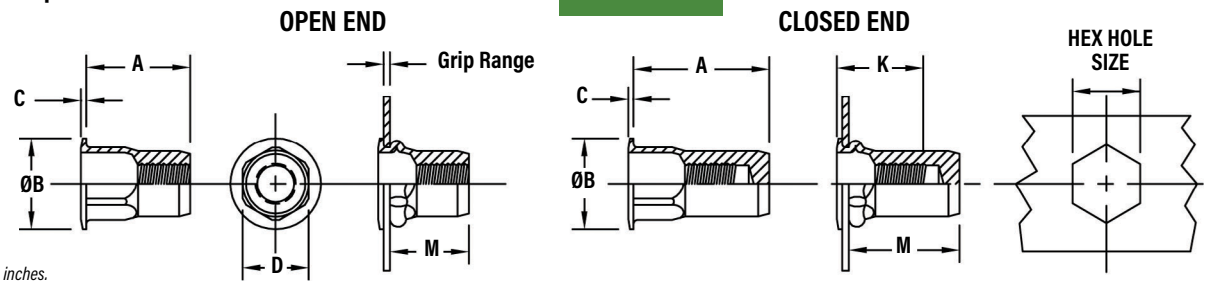

All dimensions are in inches.

Thread Size (1)	Part Number (2)	Grip Range (1)	Open						Closed							Hex Hole Size In Sheet +.006 -.000
			A ±.015	ØB ±.015	C Nom.	D Max.	M Ref	Weight lbs./1000	A ±.015	ØB ±.015	C Nom.	D Max.	K Min.	M Ref.	Weight lbs./1000	
#6-32	AEHS8-632-80	.020 - .080	.385	.375	.027	.249	.295	3.59	.740	.375	.027	.249	.43	.640	6.97	.250
#6-32	AEHS8-632-130	.080 - .130	.435	.375	.027	.249	.295	3.95	.740	.375	.027	.249	.43	.580	7.28	.250
#8-32	AEHS8-832-80	.020 - .080	.385	.375	.027	.249	.295	3.38	.740	.375	.027	.249	.43	.640	7.28	.250
#8-32	AEHS8-832-130	.080 - .130	.435	.375	.027	.249	.295	4.53	.740	.375	.027	.249	.43	.580	8.82	.250
#10-32	AEHS8-1032-130	.020 - .130	.435	.390	.027	.280	.275	4.71	1.030	.390	.027	.280	.58	.845	11.6	.281
#10-32	AEHS8-1032-225	.130 - .225	.535	.390	.027	.280	.275	5.04	1.030	.390	.027	.280	.58	.735	12.51	.281
1/4-20	AEHS8-420-165	.027 - .165	.585	.510	.030	.374	.400	9.45	1.190	.510	.030	.374	.70	1.015	23.07	.375
1/4-20	AEHS8-420-260	.165 - .260	.685	.510	.030	.374	.400	9.72	1.190	.510	.030	.374	.70	.915	23.69	.375
5/16-18	AEHS8-518-150	.027 - .150	.685	.655	.035	.499	.530	18.75	1.445	.655	.035	.499	.82	1.235	53.53	.500
5/16-18	AEHS8-518-312	.150 - .312	.845	.655	.035	.499	.515	21.25	1.445	.655	.035	.499	.82	1.220	54.04	.500
3/8-16	AEHS8-616-150	.027 - .150	.685	.655	.035	.499	.530	17.24	1.445	.655	.035	.499	.83	1.235	45.94	.500
3/8-16	AEHS8-616-312	.150 - .312	.845	.655	.035	.499	.515	19.65	1.445	.655	.035	.499	.83	1.220	46.45	.500
1/2-13	AEHS8-813-200	.063 - .200	1.150	.865	.050	.688	.950	—	—	—	—	—	—	—	—	.689
1/2-13	AEHS8-813-350	.200 - .350	1.300	.865	.050	.688	.950	—	—	—	—	—	—	—	—	.689

All dimensions are in millimeters.

Thread Size x Pitch (1)	Part Number (2)	Grip Range (1)	Open						Closed							Hex Hole Size In Sheet +0.15
			A ±0.38	ØB ±0.38	C Nom.	D Max.	M Ref.	Weight kg/1000	A ±0.38	ØB ±0.38	C Nom.	D Max.	K Min.	M Ref.	Weight kg/1000	
M4 x 0.7	AEHS8-470-2.0	0.5 - 2	9.78	9.53	0.68	6.35	7.49	1.77	18.8	9.53	0.68	6.35	11.6	16.26	3.3	6.35
M4 x 0.7	AEHS8-470-3.3	2 - 3.3	11.05	9.53	0.68	6.35	7.49	1.89	18.8	9.53	0.68	6.35	11.6	14.73	4	6.35
M5 x 0.8	AEHS8-580-3.3	0.5 - 3.3	11.05	9.91	0.68	7.1	6.99	2.24	26.16	9.91	0.68	7.1	15.6	21.46	5.26	7.14
M5 x 0.8	AEHS8-580-5.7	3.3 - 5.7	13.59	9.91	0.68	7.1	6.99	2.33	26.16	9.91	0.68	7.1	15.6	18.67	5.67	7.14
M6 x 1	AEHS8-610-4.2	0.7 - 4.2	14.86	12.96	0.76	9.5	10.16	4.05	30.23	12.96	0.76	9.5	17.5	25.78	10.46	9.53
M6 x 1	AEHS8-610-6.6	4.2 - 6.6	17.4	12.96	0.76	9.5	10.16	4.45	30.23	12.96	0.76	9.5	17.5	23.24	10.75	9.53
M8 x 1.25	AEHS8-8125-3.8	0.7 - 3.8	17.4	16.64	0.89	12.7	13.46	8.51	36.7	16.64	0.89	12.7	20.2	31.37	24.28	12.7
M8 x 1.25	AEHS8-8125-7.9	3.8 - 7.9	21.46	16.64	0.89	12.7	13.08	9.64	36.7	16.64	0.89	12.7	20.2	30.99	24.51	12.7
M10 x 1.5	AEHS8-1015-3.8	0.7 - 3.8	17.4	16.64	0.89	12.7	13.46	7.82	36.7	16.64	0.89	12.7	20.8	31.37	20.84	12.7
M10 x 1.5	AEHS8-1015-7.9	3.8 - 7.9	21.46	16.64	0.89	12.7	13.08	8.91	36.7	16.64	0.89	12.7	20.8	30.99	21.07	12.7
M12 x 1.75	AEHS8-12175-5.1	1.6 - 5.1	29.21	21.97	1.27	17.48	24.13	—	—	—	—	—	—	—	—	17.5
M12 x 1.75	AEHS8-12175-8.9	5.1 - 8.9	33.02	21.97	1.27	17.48	24.13	—	—	—	—	—	—	—	—	17.5

MATERIAL & FINISH SPECIFICATIONS

Type	Threads	Standard Material	Standard Finish
AEHS	Unified, 2B per ASME B1.1 Metric, 6H per ASME B1.13M	Low Carbon Steel	RoHS Compliant Zinc Yellow Plus Lubricant
AEHC	Unified, 2B per ASME B1.1 Metric, 6H per ASME B1.13M	Stainless Steel	Passivated and/or tested per ASTM A380
AEHA	Unified, 2B per ASME B1.1 Metric, 6H per ASME B1.13M	Aluminum	No finish
AEHB	Unified, 2B per ASME B1.1 Metric, 6H per ASME B1.13M	Brass	No finish

Part Number Designation

AEH S 8 - 632 - 80 B

- AEH → Type
- S → Material
- 8 → Finish
- 632 → Thread Code
- 80 → Max. Grip
- B → Closed End Designation

SEE PAGE 52 FOR MORE DETAIL

(1) Additional grip ranges and fine thread sizes such as 10-24, 1/4-28 and 3/8-24 are available. Minimum order quantities may apply.
(2) For closed end, add a "B" to the end of the part number.

AEO™ SpinTite® THIN-WALL LOW-PROFILE HEAD INSERTS

- **Features a low-profile head design.**
- **Allows near-flush installations with no need for special hole preparations such as countersinking or dimpling.**

For recommended installation tool, see tool selector guide on page 50.

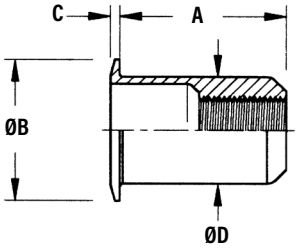

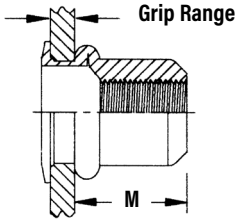

All dimensions are in inches.

Thread Size (1)	Part Number	Grip Range (1)	A ±.015	ØB ±.015	C Nom.	ØD Max.	M Ref.	Hole Size In Sheet +.006 -.000	Weight lbs./1000
#6-32	AEOS10-632-80	.020 - .080	.385	.295	.018	.249	.315	.250	2.61
#8-32	AEOS10-832-80	.020 - .080	.385	.295	.018	.249	.315	.250	2.41
#10-24	AEOS10-1024-130	.020 - .130	.440	.320	.020	.280	.330	.281	—
#10-32	AEOS10-1032-130	.020 - .130	.440	.320	.020	.280	.330	.281	3.61
1/4-20	AEOS10-420-165	.030 - .165	.580	.425	.022	.374	.440	.375	8.22
1/4-28	AEOS10-428-165	.030 - .165	.580	.425	.022	.374	.440	.375	—
5/16-18	AEOS10-518-200	.040 - .200	.690	.560	.022	.499	.540	.500	16.64
5/16-24	AEOS10-524-200	.040 - .200	.690	.560	.022	.499	.540	.500	—
3/8-16	AEOS10-616-200	.040 - .200	.690	.560	.022	.499	.540	.500	13.03
3/8-24	AEOS10-624-200	.040 - .200	.690	.560	.022	.499	.540	.500	—

All dimensions are in millimeters.

Thread Size x Pitch (1)	Part Number	Grip Range (1)	A ±0.38	ØB ±0.25	C Nom.	ØD Max.	M Ref.	Hole Size In Sheet +0.15	Weight kg/1000
M4 x 0.7	AEOS10-470-2.0	0.5 - 2	9.78	7.49	0.46	6.32	8	6.4	1
M5 x 0.8	AEOS10-580-3.3	0.5 - 3.3	11.18	8.13	0.51	7.11	8.38	7.2	1.64
M6 x 1	AEOS10-610-4.2	0.76 - 4.2	14.73	10.8	0.56	9.5	11.18	9.6	3.87
M8 x 1.25	AEOS10-8125-5.1	1.02 - 5.1	17.53	14.22	0.56	12.67	13.72	12.7	7.34
M10 x 1.5	AEOS10-1015-5.1	1.02 - 5.1	17.53	14.22	0.56	12.67	13.72	12.7	5.75

MATERIAL & FINISH SPECIFICATIONS

Type	Threads	Standard Material(2)	Standard Finish
AEO	Unified, 2B per ASME B1.1 Metric, 6H per ASME B1.13M	Low Carbon Steel	RoHS Compliant Zinc Clear Plus Lubricant

Part Number Designation

AEO S 10 - 632 - 80

Type | Material | Finish | Thread Code | Max. Grip

SEE PAGE 52 FOR MORE DETAIL

(1) Additional grip ranges and fine thread sizes such as 10-24, 1/4-28 and 3/8-24 are available. Minimum order quantities may apply.
(2) Other materials available. See page 52 for details. Minimum quantities may apply.

AET™ SpinTite® 360˚ SWAGING LOW-PROFILE HEAD INSERTS

- **Works in any thickness over .029"/0.76 mm including blind applications.**
- **Minimal backside protrusion for restricted space applications.**

For recommended installation tool, see tool selector guide on page 50.

OPEN END

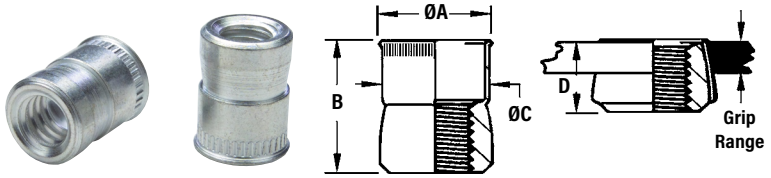

CLOSED END

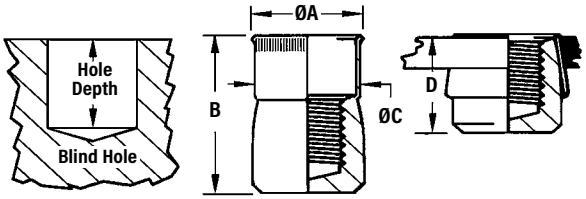

All dimensions are in inches.

Thread Size	Type			Thread Code	Installation Hole Size				Open							Closed				Blind Hole Depth Min.
	Steel	Stain-less	Alum-inum		Grip Range				ØA ±.005	B ±.015	ØC Max.	D Ref.	Weight lbs./1000			ØA ±.005	B ±.015	ØC Max.	D Ref.	
					.030 - .090	.091 - .124	.125 - .186	.187 - OVER					AETS	AETC	AETA					
#4-40	AETS	AETC	AETA	440	.188	.194	.194	.196	.211	.370	.1875	.205	0.99	0.99	0.33	.211	.660	.1875	.495	.400
#6-32	AETS	AETC	AETA	632	.219	.221	.228	.228	.240	.370	.2185	.205	1.48	1.48	0.49	.240	.675	.2185	.505	.400
#8-32	AETS	AETC	AETA	832	.250	.257	.266	.266	.269	.370	.2495	.205	1.98	1.98	0.65	.269	.675	.2495	.505	.400
#10-24	AETS	AETC	AETA	1024	.281	.290	.290	.297	.306	.370	.2805	.205	2.22	2.22	0.74	.306	.685	.2805	.520	.400
#10-32	AETS	AETC	AETA	1032	.281	.290	.290	.297	.306	.370	.2805	.205	2.23	2.23	0.74	.306	.685	.2805	.520	.400
1/4-20	AETS	AETC	AETA	420	.375	.375	.386	.391	.400	.515	.3745	.275	5.94	5.94	1.98	.400	1.005	.3745	.760	.540
5/16-18	AETS	AETC	AETA	518	.500	.500	.516	.516	.528	.615	.4995	.325	12.74	12.74	4.26	.528	1.065	.4995	.770	.640
3/8-16	AETS	AETC	AETA	616	.563	.563	.578	.578	.588	.745	.5615	.390	17.82	17.82	5.94	.588	1.450	.5615	1.095	.770
1/2-13	AETS	AETC	AETA	813	.750	.766	.781	.790	.800	.935	.7485	.485	19.50	19.50	6.27	.800	NA	.7485	NA	.960

All dimensions are in millimeters.

Thread Size x Pitch	Type			Thread Code	Installation Hole Size				Open							Closed				Blind Hole Depth Min.
	Steel	Stain-less	Alum-inum		Grip Range				ØA ±0.13	B ±0.38	ØC Max.	D Ref.	Weight kg/1000			ØA ±0.13	B ±0.38	ØC Max.	D Ref.	
					0.76 - 2.3	2.31 - 3.15	3.16 - 4.75	4.76 - OVER					AETS	AETC	AETA					
M3x0.5	AETS	AETC	AETA	350	4.75	4.9	4.9	4.97	5.36	9.4	4.76	5.21	—	—	—	5.36	16.77	4.76	12.57	10.16
M4x0.7	AETS	AETC	AETA	470	6.35	6.5	6.74	6.74	6.83	9.4	6.34	5.21	0.45	0.45	0.3	6.83	17.15	6.34	12.83	10.16
M5x0.8	AETS	AETC	AETA	580	7.14	7.37	7.4	7.54	7.77	9.4	7.12	5.21	0.9	0.9	0.34	7.77	17.4	7.12	13.21	10.16
M6x1	AETS	AETC	AETA	610	9.52	9.52	9.8	9.92	10.16	13.08	9.51	6.99	1.01	1.01	0.9	10.16	25.53	9.51	19.3	13.72
M8x1.25	AETS	AETC	AETA	8125	12.7	12.7	13.09	13.09	13.41	15.62	12.69	8.26	5.78	5.78	1.93	13.41	27.05	12.69	19.56	16.26
M10x1.5	AETS	AETC	AETA	1015	14.28	14.28	14.68	14.68	14.94	18.92	14.26	9.91	8.35	8.35	2.7	14.94	36.83	14.26	27.81	19.56
M12x1.75	AETS	AETC	AETA	12175	19.05	19.44	19.84	20.05	20.32	23.75	19.01	12.32	8.85	8.85	2.84	20.32	NA	19.01	NA	24.38

Additional grip ranges and fine thread sizes such as 10-24, 1/4-28 and 3/8-24 are available. Minimum order quantities may apply.

NOTE: *The internal threads are manufactured oversized to compensate for resulting thread portion shrinkage during the installation process. They are not gaugeable prior to or after installation but will be compatible with Class 2A/3A or 6g screws after installation.*

Available in RoHS compliant Tin/Zinc plate

Part Number Designation

AET S 9 - 632 B

Type | Material | Finish* | Thread Code | Closed End Designation

* None = Cadmium Plate (standard)
9 = Tin/Zinc Plate (optional)

SEE PAGE 52 FOR MORE DETAIL

MATERIAL & FINISH SPECIFICATIONS

Type	Standard Material(1)	Standard Finish
AETS	Low Carbon Steel	Cadmium Plate per SAE AMS-QQ-P-416, Class III, Type I
AETC	300 Series Stainless Steel	Cadmium Plate per SAE AMS-QQ-P-416, Class III, Type I
AETA	Aluminum	Cadmium Plate per SAE AMS-QQ-P-416, Class III, Type I

(1) Other materials available. See page 52 for details. Minimum quantities may apply.

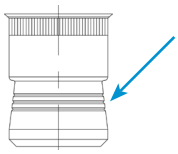

AET inserts identification grooves
Steel: none
Stainless steel: 1
Brass: 2
Aluminum: 3

AEW™ SpinTite® 360˚ SWAGING LOW-PROFILE HEAD INSERTS

- **Knurls under the head of the insert increase spinout resistance.**
- **Works in any thickness over .062"/1.57 mm including blind applications.**
- **Minimal backside protrusion for restricted space applications.**

For recommended installation tool, see tool selector guide on page 50.

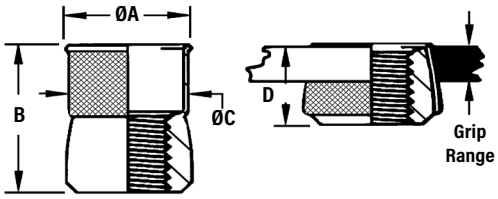

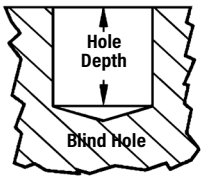

All dimensions are in inches.

Thread Size	Type		Thread Code	Installation Hole Size +.005 -.000	ØA ±.005	B ±.015	ØC Max.	D Ref.	Blind Hole Depth Min.	Weight lbs./1000	
	Steel	Brass								AEWS	AEWB
#6-32	AEWS	AEWB	632	.234	.255	.370	.233	.205	.400	1.62	1.68
#8-32	AEWS	AEWB	832	.266	.285	.370	.264	.205	.400	2.08	2.18
#10-24	AEWS	AEWB	1024	.297	.320	.370	.295	.205	.400	2.47	2.47
#10-32	AEWS	AEWB	1032	.297	.320	.370	.295	.205	.400	2.47	2.47
1/4-20	AEWS	AEWB	420	.391	.415	.515	.389	.275	.540	6.04	6.69
5/16-18	AEWS	AEWB	518	.531	.550	.615	.528	.325	.640	12.67	14.37
3/8-16	AEWS	AEWB	616	.594	.615	.740	.590	.390	.770	17.22	20.09

All dimensions are in millimeters.

Thread Size x Pitch	Type		Thread Code	Installation Hole Size +0.13	ØA ±0.13	B ±0.38	ØC Max.	D Ref.	Blind Hole Depth Min.	Weight kg/1000	
	Steel	Brass								AEWS	AEWB
M4 x 0.7	AEWS	AEWB	470	6.75	7.24	9.4	6.71	5.21	10.16	0.94	0.99
M5 x 0.8	AEWS	AEWB	580	7.54	8.13	9.4	7.5	5.21	10.16	1.12	1.12
M6 x 1	AEWS	AEWB	610	9.92	10.54	13.08	9.88	6.99	13.72	2.74	2.96
M8 x 1.25	AEWS	AEWB	8125	13.49	13.97	15.62	13.41	8.26	16.26	5.75	6.52
M10 x 1.5	AEWS	AEWB	1015	15	15.62	18.8	14.99	9.91	19.56	7.81	9.11

Additional grip ranges and fine thread sizes such as 10-24, 1/4-28 and 3/8-24 are available. Minimum order quantities may apply.

NOTE: *The internal threads are manufactured oversized to compensate for resulting thread portion shrinkage during the installation process. They are not gaugeable prior to or after installation but will be compatible with Class 2A/3A or 6g screws after installation.*

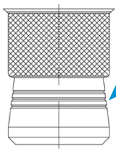

AEW insert identification grooves
Steel: none
Stainless steel: 1
Brass: 2
Aluminum: 3

Available in RoHS compliant Tin/Zinc plate

Part Number Designation

AEW S 9 - 632 B

Type | Material | Finish* | Thread Code | Closed End Designation

* None = Cadmium Plate (standard)
9 = Tin/Zinc Plate (optional)

SEE PAGE 52 FOR MORE DETAIL

MATERIAL & FINISH SPECIFICATIONS

Type	Standard Material(1)	Standard Finish
AEWS	Low Carbon Steel	Cadmium Plate per SAE AMS-QQ-P-416, Class III, Type I
AEWB	Free-machining Leaded brass	Cadmium Plate per SAE AMS-QQ-P-416, Class III, Type I

(1) Other materials available. See page 52 for details. Minimum quantities may apply.

AES™ SpinTite® BLIND THREADED STUDS

- **Provides strong external threads in blind applications.**
- **Easy to install using spin-spin or pull-to-pressure tooling.**
- **Available with MAThread® anti cross-threading feature.**

For recommended installation tool, see tool selector guide on page 50.

NOTE: The "L" dimension is the height of the installed stud at max grip. The height of the stud will increase if it is installed into thinner material. To calculate "actual L" use this formula: max grip - actual grip + L = "actual L"

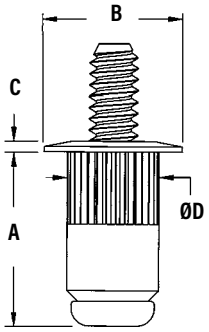

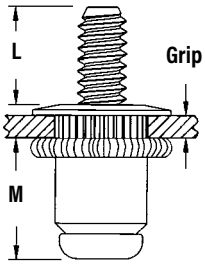

All dimensions are in inches.

Thread Size	Grip Code	Grip Range	Part Number Description	Stud Length "L" Nom. (at Max. Grip) / ATLAS Stocking Order Number			A ±.020	B ±.015	C Nom.	ØD Max.	M Ref.	Hole Size In Sheet +.006 -.000
#6-32	80	.020 - .080	AESS-632-80-L	.500 / AES9058	.625 / AES9059	.750 / AES9060	.490	.390	.030	.265	.375	.266
#6-32	130	.080 - .130	AESS-632-130-L	.450 / AES9055	.575 / AES9056	.700 / AES9057	.540	.390	.030	.265	.375	.266
#8-32	80	.020 - .080	AESS-832-80-L	.500 / AES9070	.625 / AES9071	.750 / AES9072	.490	.390	.030	.265	.375	.266
#8-32	130	.080 - .130	AESS-832-130-L	.450 / AES9067	.575 / AES9068	.700 / AES9069	.540	.390	.030	.265	.375	.266
#10-24	130	.020 - .130	AESS-1024-130-L	.500 / AES9007	.625 / AES9008	.750 / AES9009	.545	.415	.030	.296	.385	.297
#10-24	225	.130 - .225	AESS-1024-225-L	.405 / AES9010	.530 / AES9011	.655 / AES9012	.655	.415	.030	.296	.385	.297
#10-32	130	.020 - .130	AESS-1032-130-L	.500 / AES9013	.625 / AES9014	.750 / AES9015	.545	.415	.030	.296	.385	.297
#10-32	225	.130 - .225	AESS-1032-225-L	.405 / AES9016	.530 / AES9017	.655 / AAES9018	.655	.415	.030	.296	.385	.297
1/4-20	165	.027 - .165	AESS-420-165-L	.625 / AES9020	.8125 / AES9021	1.000 / AES9019	.670	.500	.030	.390	.470	.391
1/4-20	260	.165 - .260	AESS-420-260-L	.530 / AES9022	.7175 / AES9023	.905 / AES9024	.770	.500	.030	.390	.470	.391
5/16-18	150	.027 - .150	AESS-518-150-L	.625 / AES9032	.875 / AES9033	1.125 / AES9031	.805	.685	.035	.530	.585	.531
5/16-18	312	.150 - .312	AESS-518-312-L	.530 / AES9034	.713 / AES9035	.963 / AES9036	.920	.685	.035	.530	.540	.531
3/8-16	150	.027 - .150	AESS-616-150-L	.750 / AES9051	1.000 / AES9049	1.250 / AES9050	.805	.685	.035	.530	.585	.531
3/8-16	312	.150 - .312	AESS-616-312-L	.588 / AES9053	.838 / AES9054	1.088 / AES9052	.920	.685	.035	.530	.540	.531

All dimensions are in millimeters.

Thread Size x Pitch	Grip Code	Grip Range	Part Number Description	Stud Length "L" Nom. (at Max. Grip) / ATLAS Stocking Order Number			A ±0.51	B ±0.38	C Nom.	ØD Max.	M Ref.	Hole Size In Sheet +0.15
M4 x 0.7	2.0	0.5 - 2.0	AESS-470-2.0-L	12 / AES9025	15 / AES9026	20 / AES9027	12.45	9.91	0.76	6.73	9.53	6.75
M4 x 0.7	3.3	2.0- 3.3	AESS-470-3.3-L	10.7 / AES9028	13.7 / AES9029	18.7 / AES9030	13.72	9.91	0.76	6.73	9.53	6.75
M5 x 0.8	3.3	0.5 - 3.3	AESS-580-3.3-L	12 / AES9037	15 / AES9038	20 / AES9039	13.85	10.54	0.76	7.52	9.78	7.6
M5 x 0.8	5.7	3.3 - 5.7	AESS-580-5.7-L	9.6 / AES9042	12.6 / AES9040	17.6 / AES9041	16.64	10.54	0.76	7.52	9.78	7.6
M6 x 1	4.2	0.7 - 4.2	AESS-610-4.2-L	15 / AES9043	20 / AES9044	25 / AES9045	17.02	12.7	0.76	9.91	11.94	10
M6 x 1	6.6	4.2 - 6.6	AESS-610-6.6-L	12.6 / AES9046	17.6 / AES9047	22.6 / AES9048	19.56	12.7	0.76	9.91	11.94	10
M8 x 1.25	3.8	0.7 - 3.8	AESS-8125-3.8-L	16 / AES9061	22 / AES9062	28 / AES9063	20.45	17.4	0.89	13.46	14.86	13.5
M8 x 1.25	7.9	3.8 - 7.9	AESS-8125-7.9-L	13 / AES9064	17.9 / AES9065	23.9 / AES9066	23.37	17.4	0.89	13.46	13.72	13.5
M10 x 1.5	3.8	0.7 - 3.8	AESS-1015-3.8-L	20 / AES9001	25 / AES9002	30 / AES9003	20.45	17.4	0.89	13.46	14.86	13.5
M10 x 1.5	7.9	3.8 - 7.9	AESS-1015-7.9-L	17 / AES9004	20.9 / AES9005	25.9 / AES9006	23.37	17.4	0.89	13.46	13.72	13.5

***NOTE:** The standard is assembled with an AEL insert but can also be assembled with an AEK or an AEH insert.*

MAThread® is a trademark of MAThread, Inc.

Part Number Designation

AES S - 518 - 150 - 625

Type | Material | Thread Code | Max. Grip | Stud Length

No finish code for standard finish zinc yellow.

MATERIAL & FINISH SPECIFICATIONS

Type	Threads	Standard Material(1)	Standard Finish
AES	Unified, 2A per ASME B1.1 Metric, 6g per ASME B1.13M	Insert - Low Carbon Steel Stud - Heat-treated carbon steel	RoHS Compliant Zinc Yellow

(1) Other materials available. See page 52 for details. Minimum quantities may apply.

Data applies to parts made from low carbon steel.

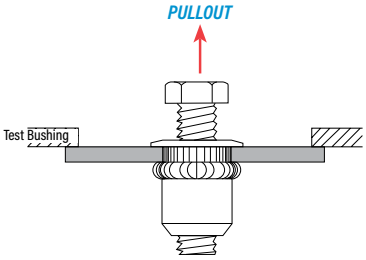

Pullout is the force required to pull the insert from the sheet. (1)

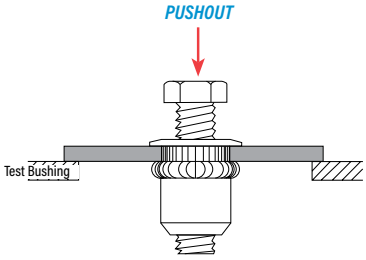

Pushout is the force required to push the insert through the sheet. (2)

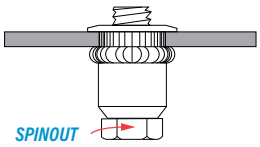

Per Application

Spinout is the measure of the torsional holding power of the fastener in the parent material after installation without inducing clamp load on the fastener.

Thread Size	Max. Grip	Test Sheet	Near Minimum Grip				Near Maximum Grip				
			Thickness (in.)	Sheet Hardness	Pullout (lbs.)	Spinout (in. lbs.)	Thickness (in.)	Sheet Hardness	Pullout (lbs.)	Pushout (lbs.)	
										AEL	AEK
6-32 & 8-32	.080	Aluminum	.032	HRB 48	339	—	.060	HRB 67	897	—	—
		Cold-rolled Steel	.030	HRB 37	339	13	.071	HRB 43	969	689	390
	.130	Aluminum	.090	HRB 66	1515	—	.123	HRB 63	1684	—	—
		Cold-rolled Steel	.087	HRB 75	1514	17	.115	HRB 52	1869	689	390
10-32 & 10-24	.130	Aluminum	.030	HRB 28	342	—	.125	HRB 57	2284	—	—
		Cold-rolled Steel	.029	HRB 47	469	21	.128	HRB 49	2429	940	408
	.225	Aluminum	.136	HRB 20	2464	—	.185	HRB 57	2220	—	—
		Cold-rolled Steel	.165	HRB 56	2530	21	.187	HRB 77	2442	940	408
1/4-20 & 1/4-28	.165	Aluminum	.032	HRB 48	561	—	.125	HRB 57	2441	—	—
		Cold-rolled Steel	.030	HRB 43	581	39	.165	HRB 56	3448	744	615
	.260	Aluminum	.185	HRB 58	2798	—	.250	HRB 60	3796	—	—
		Cold-rolled Steel	.165	HRB 56	3028	39	.247	HRB 96	3370	744	615
5/16-18, 5/16-24, & 3/8-16	.150	Aluminum	.032	HRB 48	668	—	.125	HRB 57	3602	—	—
		Cold-rolled Steel	.030	HRB 43	687	75	.115	HRB 52	3478	1505	901
	.312	Aluminum	.185	HRB 60	5152	—	.312	HRB 52	6451	—	—
		Cold-rolled Steel	.165	HRB 60	4934	60	.312	HRB 90	5975	1505	901

Thread Size	Max. Grip	Test Sheet	Near Minimum Grip				Near Maximum Grip				
			Thickness (mm)	Sheet Hardness	Pullout (kN)	Spinout (N•m)	Thickness (mm)	Sheet Hardness	Pullout (kN)	Pushout (kN)	
										AEL	AEK
M4	2.0	Aluminum	0.8	HRB 48	1.5	—	1.5	HRB 67	4	—	—
		Cold-rolled Steel	0.8	HRB 37	1.5	2	1.8	HRB 43	4.3	3.1	1.7
	3.3	Aluminum	2.3	HRB 66	6.7	—	3.1	HRB 63	7.5	—	—
		Cold-rolled Steel	2.2	HRB 75	6.7	2	2.9	HRB 52	8.3	3.1	1.7
M5	3.3	Aluminum	0.8	HRB 28	1.5	—	3.1	HRB 57	10.2	—	—
		Cold-rolled Steel	0.7	HRB 47	2.1	2.3	3.3	HRB 49	10.8	4.2	1.8
	5.7	Aluminum	3.5	HRB 20	11	—	4.7	HRB 57	9.9	—	—
		Cold-rolled Steel	4.2	HRB 56	11.3	2.3	4.7	HRB 77	10.9	4.2	1.8
M6	4.2	Aluminum	0.8	HRB 48	2.5	—	3.2	HRB 57	10.9	—	—
		Cold-rolled Steel	0.8	HRB 43	2.6	4.4	4.2	HRB 56	15.3	3.3	2.7
	6.6	Aluminum	4.7	HRB 58	12.4	—	6.4	HRB 60	16.9	—	—
		Cold-rolled Steel	4.2	HRB 56	13.5	4.4	6.3	HRB 96	15	3.3	2.7
M8 & M10	3.8	Aluminum	0.8	HRB 48	3	—	3.2	HRB 57	16	—	—
		Cold-rolled Steel	0.8	HRB 43	3.1	8.5	2.9	HRB 52	15.5	6.7	4
	7.9	Aluminum	4.7	HRB 60	22.9	—	7.9	HRB 52	28.7	—	—
		Cold-rolled Steel	4.2	HRB 60	21.9	6.6	7.9	HRB 90	26.6	6.7	4

NOTE: *Data given is the average of multiple tests. Values are for reference only and in no way should be used as actual pass/fail criterion.*
NOTE: *Most testing performed in material thickness of 20 to 80% of fastener grip.*
NOTE: *All test were conducted using steel inserts and components.*
NOTE: *This data is provided for comparative information only.*

AES™ SpinTite® PERFORMANCE DATA

Data applies to parts made from low carbon steel.

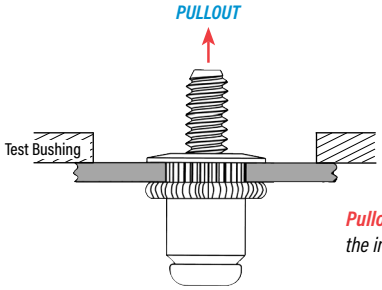

***Pullout** is the force required to pull the insert from the sheet.*

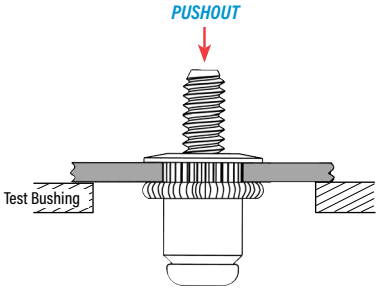

***Pushout** is the force required to push the insert through the sheet.*

Thread Size	Max. Grip (in.)	Test Sheet	Near Minimum Grip			Near Maximum Grip			
			Thickness (in.)	Sheet Hardness	Pullout (lbs.)	Thickness (in.)	Sheet Hardness	Pullout (lbs.)	Pushout (lbs.) (1)
6-32	.080	Aluminum	.032	HRB 48	339	.060	HRB 67	897	—
		Cold-rolled Steel	.030	HRB 37	339	.071	HRB 43	969	689
	.130	Aluminum	.090	HRB 66	1186	.123	HRB 63	1186	—
		Cold-rolled Steel	.087	HRB 75	1186	.115	HRB 52	1186	689
8-32	.080	Aluminum	.032	HRB 48	339	.060	HRB 67	897	—
		Cold-rolled Steel	.030	HRB 37	339	.071	HRB 43	969	689
	.130	Aluminum	.090	HRB 66	1515	.123	HRB 63	1684	—
		Cold-rolled Steel	.087	HRB 75	1514	.115	HRB 52	1828	689
10-24	.130	Aluminum	.030	HRB 28	342	.125	HRB 57	2284	—
		Cold-rolled Steel	.029	HRB 47	469	.128	HRB 49	2429	940
	.225	Aluminum	.136	HRB 20	2288	.185	HRB 57	2220	—
		Cold-rolled Steel	.165	HRB 56	2288	.187	HRB 77	2288	940
10-32	.130	Aluminum	.030	HRB 28	342	.125	HRB 57	2284	—
		Cold-rolled Steel	.029	HRB 47	469	.128	HRB 49	2429	940
	.225	Aluminum	.136	HRB 20	2464	.185	HRB 57	2220	—
		Cold-rolled Steel	.165	HRB 56	2530	.187	HRB 77	2442	940
1/4-20 & 1/4-28	.165	Aluminum	.032	HRB 48	561	.125	HRB 57	2441	—
		Cold-rolled Steel	.030	HRB 43	581	.165	HRB 56	3448	744
	.260	Aluminum	.185	HRB 58	2798	.250	HRB 60	3796	—
		Cold-rolled Steel	.165	HRB 56	3028	.247	HRB 96	3370	744
5/16-18, 5/16-24, & 3/8-16	.150	Aluminum	.032	HRB 48	668	.125	HRB 57	3602	—
		Cold-rolled Steel	.030	HRB 43	687	.115	HRB 52	3478	1505
	.312	Aluminum	.185	HRB 60	5152	.312	HRB 52	6451	—
		Cold-rolled Steel	.165	HRB 60	4934	.312	HRB 90	5975	1505

Thread Size	Max. Grip (mm)	Test Sheet	Near Minimum Grip			Near Maximum Grip			
			Thickness (mm)	Sheet Hardness	Pullout (kN)	Thickness (mm)	Sheet Hardness	Pullout (kN)	Pushout (kN) (1)
M4	2.0	Aluminum	0.8	HRB 48	1.5	1.5	HRB 67	4	—
		Cold-rolled Steel	0.8	HRB 37	1.5	1.8	HRB 43	4.3	3.1
	3.3	Aluminum	2.3	HRB 66	6.7	3.1	HRB 63	7.5	—
		Cold-rolled Steel	2.2	HRB 75	6.7	2.9	HRB 52	7.9	3.1
M5	3.3	Aluminum	0.8	HRB 28	1.5	3.1	HRB 57	10.2	—
		Cold-rolled Steel	0.7	HRB 47	2.1	3.3	HRB 49	10.8	4.2
	5.7	Aluminum	3.5	HRB 20	11	4.7	HRB 57	9.9	—
		Cold-rolled Steel	4.2	HRB 56	11.3	4.7	HRB 77	10.9	4.2
M6	4.2	Aluminum	0.8	HRB 48	2.5	3.2	HRB 57	10.9	—
		Cold-rolled Steel	0.8	HRB 43	2.6	4.2	HRB 56	15.3	3.3
	6.6	Aluminum	4.7	HRB 58	12.4	6.4	HRB 60	16.9	—
		Cold-rolled Steel	4.2	HRB 56	13.5	6.3	HRB 96	15	3.3
M8 & M10	3.8	Aluminum	0.8	HRB 48	3	3.2	HRB 57	16	—
		Cold-rolled Steel	0.8	HRB 43	3.1	2.9	HRB 52	15.5	6.7
	7.9	Aluminum	4.7	HRB 60	22.9	7.9	HRB 52	28.7	—
		Cold-rolled Steel	4.2	HRB 60	21.9	7.9	HRB 90	26.6	6.7

(1) Values reported are averages when all installation specifications and procedures are followed. Variations in mounting hole size and installation procedure will affect results. Performance testing of this product in your application is recommended. We will be happy to provide samples for this purpose.

For questions, e-mail Technical Support: techsupport@pemnet.com

The **ATLAS® FM™** inserts meet European design standards. The installation hole sizes are full metric and the standard finish on the inserts is zinc clear. Inserts with head style "T" provides virtually flush installation. These inserts are installed using "spin-pull" or "pull-to-pressure" installation tools. AETH inserts, shown below, are available in unified sizes. Other types are also available in unified thread sizes. Please call for availability.

For recommended installation tool, see tool selector guide on page 50. See page 53 for part number key.

- **Install into metric size round or hex holes.**
- **Available in thread sizes M3 to M10.**
- **Available in a variety of head styles: Flat, thin, and countersunk.**
- **Available in a variety of body types: Round (smooth and knurled), half hex, and full hex.**
- **Available in a variety of materials: Steel, stainless steel, aluminum, and brass.**

AETH™ THIN HEAD SEMIHEX BODY HEX COUNTERBORE INSERTS

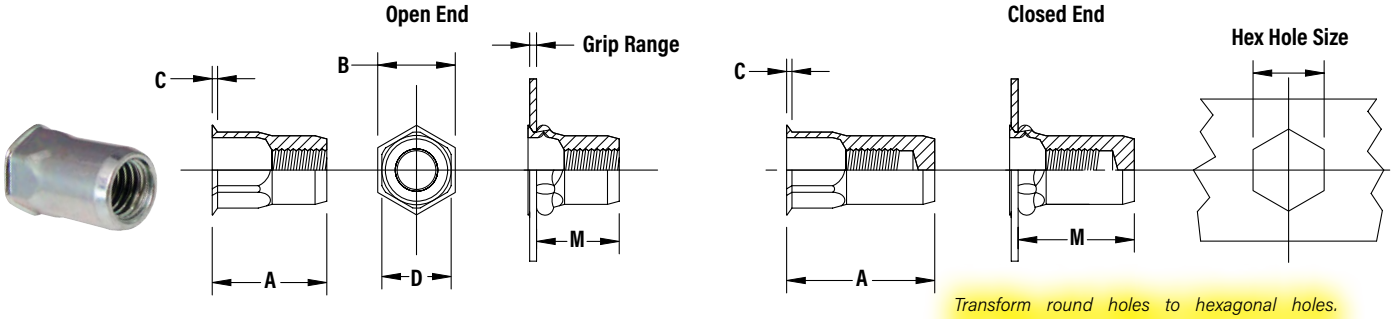

*Transform round holes to hexagonal holes. See **RIV990 and RIV991** tools on page 46.*

All dimensions are in inches.

Thread Size	Type	Grip Range	Open					Closed					Hex Hole Size +.006 -.000
	Steel		A ±.010	B ±.010	C ±.005	D Max.	M Ref.	A ±.010	B ±.010	C ±.005	D Max.	M Ref.	
#8-32	AETHS	.020 - .080	.437	.260	.018	.235	.256	.667	.260	.018	.236	.484	.236
#10-24	AETHS	.020 - .120	.488	.303	.018	.275	.297	.724	.303	.018	.275	.508	.276
#10-24	AETHS	.120 - .220	.587	.303	.018	.275	.297	.823	.303	.018	.275	.508	.276
#10-32	AETHS	.020 - .120	.488	.303	.018	.275	.297	.724	.303	.018	.275	.508	.276
#10-32	AETHS	.120 - .220	.587	.303	.018	.275	.297	.823	.303	.018	.275	.508	.276
1/4-20	AETHS	.020 - .120	.587	.394	.020	.353	.309	.898	.394	.020	.354	.654	.354
		.120 - .220	.685	.394	.020	.353	.344	.996	.394	.020	.354	.654	.354
5/16-18	AETHS	.020 - .120	.650	.472	.025	.432	.419	.996	.472	.025	.433	.724	.433
		.120 - .220	.748	.472	.025	.432	.419	1.094	.472	.025	.433	.724	.433

All dimensions are in millimeters.

Thread Size x Pitch	Type	Grip Range	Open					Closed					Hex Hole Size +0.1
	Steel		A ±0.25	B ±0.25	C ±0.13	D Max.	M Ref.	A ±0.25	B ±0.25	C ±0.13	D Max.	M Ref.	
M3 X 0.5	AETHS	0.5 – 2.0	10.05	5.5	0.46	5	6.30	14.40	5.5	0.46	5	10.60	5
M4 x 0.7	AETHS	0.5 – 2.5	11.10	6.6	0.46	5.98	6.50	16.95	6.6	0.46	6	12.30	6
M5 x 0.8	AETHS	0.5 – 3.0	12.40	7.7	0.46	6.98	7.55	18.40	7.7	0.46	6.98	12.90	7
		3.0 – 5.5	14.90				6.95	20.90					
M6 x 1	AETHS	0.5 – 3.0	14.90	10	0.50	8.98	7.85	22.80	10	0.50	8.98	16.60	9
		3.0 – 5.5	17.40				8.75	25.30					
M8 x 1.25	AETHS	0.5 – 3.0	16.50	12	0.63	10.98	10.65	25.30	12	0.63	11	18.40	11
		3.0 – 5.5	19.00				9.65	27.80					
M10 x 1.5	AETHS	0.7 – 3.5	20.30	14.2	0.74	13	12.25	31.95	14.2	0.74	13	23.90	13

AEFR™ FLAT HEAD ROUND BODY INSERTS

For recommended installation tool, see tool selector guide on page 50. See page 53 for part number key.

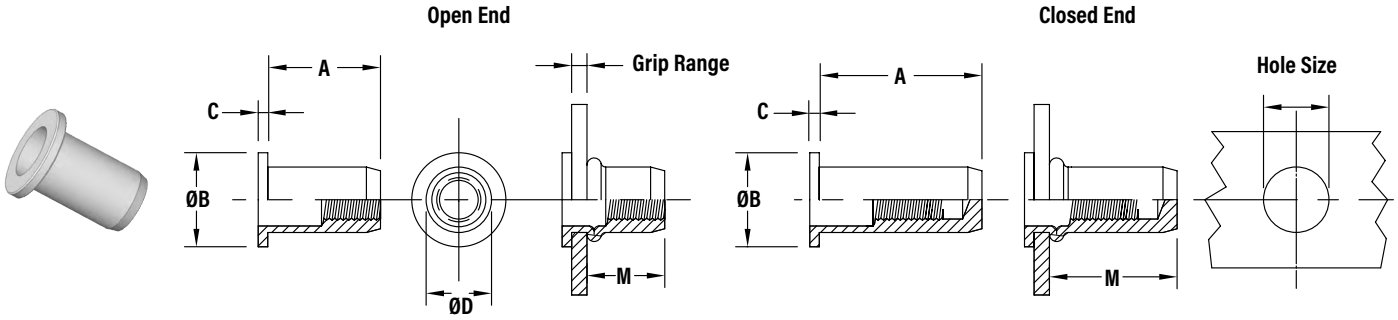

All dimensions are in millimeters.

Thread Size x Pitch	Type Steel	Grip Range	Open A ±0.25	Open ØB ±0.25	Open C ±0.13	Open ØD Max.	Open M Ref.	Closed A ±0.25	Closed ØB ±0.25	Closed C ±0.13	Closed ØD Max.	Closed M Ref.	Hole Size In Sheet +0.1
M3 X 0.5	AEFRS	0.5 – 2.0	9.75	8	0.75	5	6.00	14.1	8	0.75	5	10.35	5
M4 x 0.7	AEFRS	0.5 – 2.5	10.75	9	0.75	6	6.15	16.6	9	0.75	6	12.00	6
M5 x 0.8	AEFRS	0.5 – 3.0	12.00	10	1.0	7	6.55	18.0	10	1.0	7	12.55	7
		3.0 – 5.5	14.50					20.5					
M6 x 1	AEFRS	0.5 – 3.0	14.50	13	1.5	9	8.35	22.4	13	1.5	9	16.25	9
		3.0 – 5.5	17.00					24.9					
M8 x 1.25	AEFRS	0.5 – 3.0	16.00	16	1.5	11	9.15	24.8	16	1.5	11	17.95	11
		3.0 – 5.5	18.50					27.3					
M10 x 1.5	AEFRS	0.7 – 3.5	19.75	19	2.25	13	11.70	31.4	19	2.25	13	23.35	13

AETR™ THIN HEAD ROUND BODY INSERTS

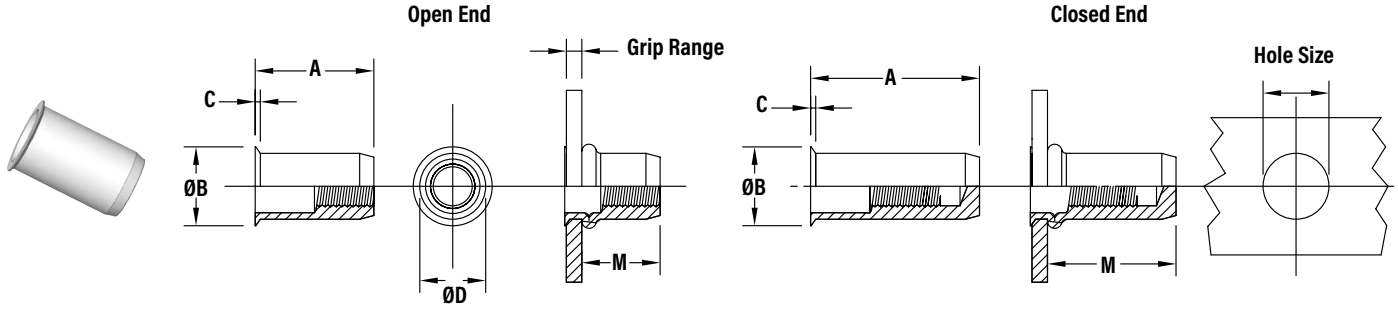

All dimensions are in millimeters.

Thread Size x Pitch	Type Steel	Grip Range	Open A ±0.25	Open ØB ±0.25	Open C ±0.13	Open ØD Max.	Open M Ref.	Closed A ±0.25	Closed ØB ±0.25	Closed C ±0.13	Closed ØD Max.	Closed M Ref.	Hole Size In Sheet +0.1
M3 X 0.5	AETRS	0.5 – 2.0	10.05	5.5	0.46	5	6.30	14.40	5.5	0.46	5	10.65	5
M4 x 0.7	AETRS	0.5 – 2.5	11.10	6.6	0.46	6	6.50	16.95	6.6	0.46	6	12.35	6
M5 x 0.8	AETRS	0.5 – 3.0	12.40	7.7	0.46	7	6.95	18.40	7.7	0.46	7	12.95	7
		3.0 – 5.5	14.90					20.90					
M6 x 1	AETRS	0.5 – 3.0	14.90	10	0.50	9	8.75	22.80	10	0.50	9	16.65	9
		3.0 – 5.5	17.40					25.30					
M8 x 1.25	AETRS	0.5 – 3.0	16.50	12	0.63	11	9.65	25.30	12	0.63	11	18.45	11
		3.0 – 5.5	19.00					27.80					
M10 x 1.5	AETRS	0.7 – 3.5	20.30	14.2	0.74	13	12.25	31.95	14.2	0.74	13	23.90	13

AEFK™ FLAT HEAD KNURLED ROUND BODY INSERTS

For recommended installation tool, see tool selector guide on page 50. See page 53 for part number key.

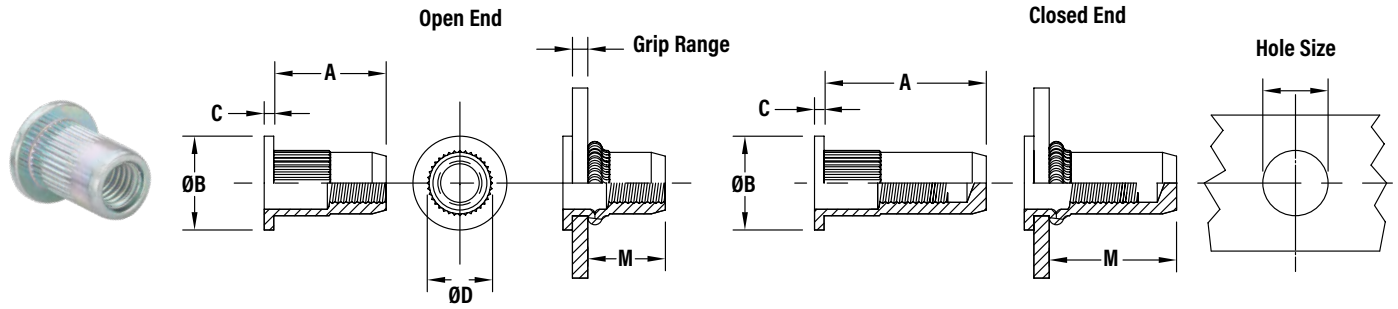

All dimensions are in millimeters.

Thread Size x Pitch	Type	Grip Range	Open					Closed					Hole Size In Sheet +0.1
	Steel		A ±0.25	ØB ±0.25	C ±0.13	ØD Max.	M Ref.	A ±0.25	ØB ±0.25	C ±0.13	ØD Max.	M Ref.	
M3 X 0.5	AEFKS	0.5 – 2.0	9.75	8	0.75	5	6.00	14.1	8	0.75	5	10.35	5
M4 x 0.7	AEFKS	0.5 – 2.5	10.75	9	0.75	6	6.15	16.6	9	0.75	6	12.00	6
M5 x 0.8	AEFKS	0.5 – 3.0	12.00	10	1.0	6.98	7.55	18.0	10	1.0	6.98	13.55	7
		3.0 – 5.5	14.50				6.55	20.5				12.35	
M6 x 1	AEFKS	0.5 – 3.0	14.50	13	1.5	8.98	8.35	22.4	13	1.5	8.98	17.75	9
		3.0 – 5.5	17.00				8.55	24.9				16.95	
M8 x 1.25	AEFKS	0.5 – 3.0	16.00	16	1.5	10.98	11.15	24.8	16	1.5	11	17.95	11
		3.0 – 5.5	18.50				11.35	27.3					
M10 x 1.5	AEFKS	0.7 – 3.5	19.75	19	2.25	12.98	13.95	31.4	19	2.25	13	23.35	13

AETK™ THIN HEAD KNURLED ROUND BODY INSERTS

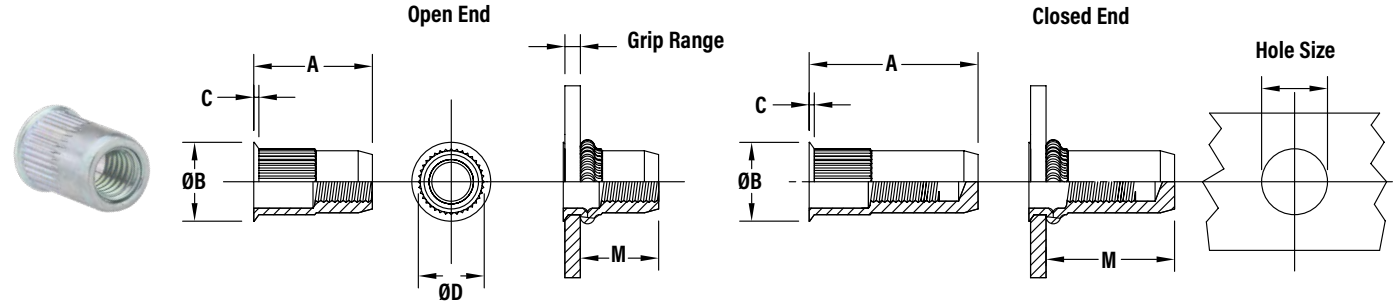

All dimensions are in millimeters.

Thread Size x Pitch	Type	Grip Range	Open					Closed					Hole Size In Sheet +0.1
	Steel		A ±0.25	ØB ±0.25	C ±0.13	ØD Max.	M Ref.	A ±0.25	ØB ±0.25	C ±0.13	ØD Max.	M Ref.	
M3 X 0.5	AETKS	0.5 – 2.0	10.05	5.5	0.46	4.98	6.30	14.40	5.5	0.46	5	10.65	5
M4 x 0.7	AETKS	0.5 – 2.5	11.10	6.6	0.46	5.98	6.40	16.95	6.6	0.46	6	12.35	6
M5 x 0.8	AETKS	0.5 – 3.0	12.40	7.7	0.46	6.98	7.55	18.40	7.7	0.46	6.98	12.95	7
		3.0 – 5.5	14.90				6.95	20.90					
M6 x 1	AETKS	0.5 – 3.0	14.90	10	0.50	8.98	7.85	22.80	10	0.50	8.98	16.65	9
		3.0 – 5.5	17.40				8.75	25.30					
M8 x 1.25	AETKS	0.5 – 3.0	16.50	12	0.63	10.98	10.65	25.30	12	0.63	11	18.45	11
		3.0 – 5.5	19.00				9.65	27.80					
M10 x 1.5	AETKS	0.7 – 3.5	20.30	14.2	0.74	12.98	12.95	31.95	14.2	0.74	13	23.90	13

AEFH™ FLAT HEAD SEMIHEX BODY HEX COUNTERBORE INSERTS

For recommended installation tool, see tool selector guide on page 50. See page 53 for part number key.

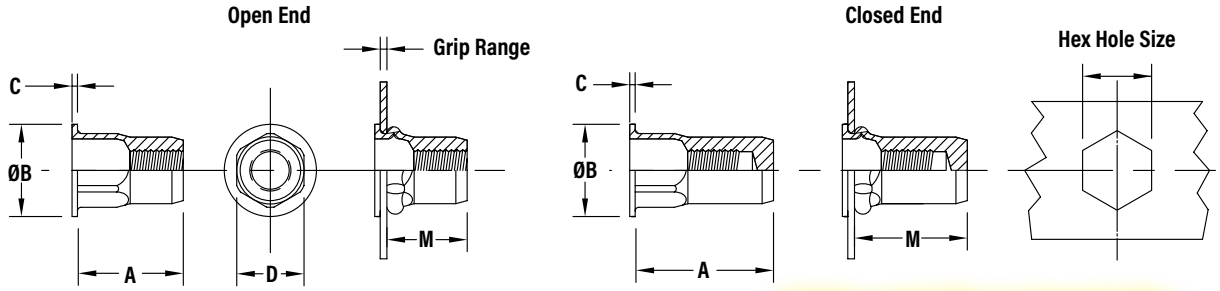

*Transform round holes to hexagonal holes. See **RIV990 and RIV991** tools on page 46.*

All dimensions are in millimeters.

Thread Size x Pitch	Type	Grip Range	Open					Closed					Hex Hole Size +0.1
	Steel		A ±0.25	ØB ±0.25	C ±0.13	D Max.	M Ref.	A ±0.25	ØB ±0.25	C ±0.13	D Max.	M Ref.	
M3 X 0.5	AEFHS	0.5 – 2.0	9.75	8	0.75	5	6.00	14.1	8	0.75	5	10.35	5
M4 x 0.7	AEFHS	0.5 – 2.5	10.75	9	0.75	6	6.20	16.6	9	0.75	6	11.50	6
M5 x 0.8	AEFHS	0.5 – 3.0	12.00	10	1.0	6.98	7.55	18.0	10	1.0	6.98	13.55	7
		3.0 – 5.5	14.50				6.55	20.5				12.55	
M6 x 1	AEFHS	0.5 – 3.0	14.50	13	1.5	8.98	7.85	22.4	13	1.5	8.98	17.75	9
		3.0 – 5.5	17.00				8.75	24.9				16.95	
M8 x 1.25	AEFHS	0.5 – 3.0	16.00	16	1.5	10.98	11.15	24.8	16	1.5	11	17.95	11
		3.0 – 5.5	18.50				11.35	27.3					
M10 x 1.5	AEFHS	0.7 – 3.5	19.75	19	2.25	13	11.70	31.4	19	2.25	13	23.35	13

AEFHH™ FLAT HEAD HEX BODY ROUND COUNTERBORE INSERTS

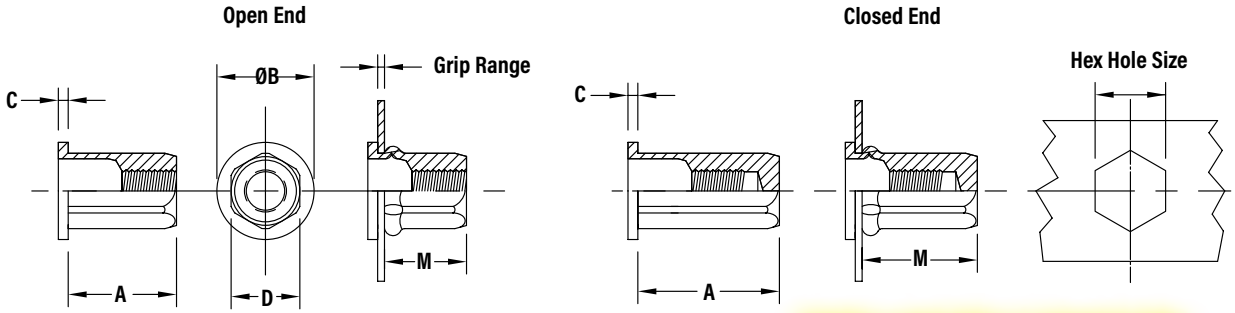

*Transform round holes to hexagonal holes. See **RIV990 and RIV991** tools on page 46.*

All dimensions are in millimeters.

Thread Size x Pitch	Type	Grip Range	Open					Closed					Hex Hole Size +0.1
	Steel		A ±0.25	ØB ±0.25	C ±0.13	D Max.	M Ref.	A ±0.25	ØB ±0.25	C ±0.13	D Max.	M Ref.	
M3 X 0.5	AEFHHS	0.5 – 2.0	9.75	8	0.75	5	6.00	14.1	8	0.75	5	10.35	5
M4 x 0.7	AEFHHS	0.5 – 2.5	10.75	9	0.75	6	6.15	16.6	9	0.75	6	12.00	6
M5 x 0.8	AEFHHS	0.5 – 3.0	12.00	10	1.0	7	6.55	18.0	10	1.0	7	12.55	7
		3.0 – 5.5	14.50					20.5					
M6 x 1	AEFHHS	0.5 – 3.0	14.50	13	1.5	9	8.35	22.4	13	1.5	9	16.25	9
		3.0 – 5.5	17.00					24.9					
M8 x 1.25	AEFHHS	0.5 – 3.0	16.00	16	1.5	11	9.15	24.8	16	1.5	11	17.95	11
		3.0 – 5.5	18.50					27.3					
M10 x 1.5	AEFHHS	0.7 – 3.5	19.75	19	2.25	13	11.70	31.4	19	2.25	13	23.35	13

AETHH™ THIN HEAD HEX BODY ROUND COUNTERBORE INSERTS

For recommended installation tool, see tool selector guide on page 50. See page 53 for part number key.

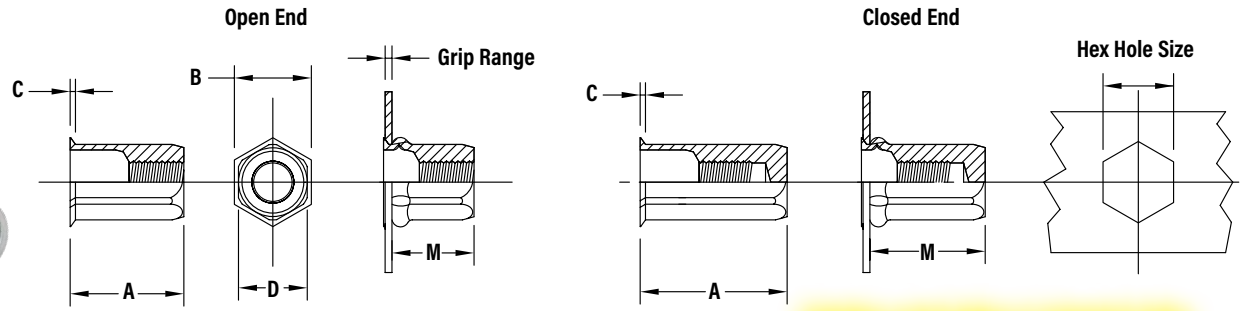

*Transform round holes to hexagonal holes. See **RIV990 and RIV991** tools on page 46.*

All dimensions are in millimeters.

Thread Size x Pitch	Type Steel	Grip Range	Open A ±0.25	Open B ±0.25	Open C ±0.13	Open D Max.	Open M Ref.	Closed A ±0.25	Closed B ±0.25	Closed C ±0.13	Closed D Max.	Closed M Ref.	Hex Hole Size +0.1
M3 X 0.5	AETHHS	0.5 – 2.0	10.05	5.5	0.46	5	6.30	14.40	5.5	0.46	5	10.65	5
M4 x 0.7	AETHHS	0.5 – 2.5	11.10	6.6	0.46	6	6.50	16.95	6.6	0.46	6	12.35	6
M5 x 0.8	AETHHS	0.5 – 3.0	12.45	7.7	0.60	6.98	8.05	18.45	7.7	0.46	7	13.00	7
		3.0 – 5.5	14.95				7.00	20.95					
M6 x 1	AETHHS	0.5 – 3.0	15.05	10	0.75	8.98	9.35	22.95	10	0.50	9	16.80	9
		3.0 – 5.5	17.55				8.90	25.45					
M8 x 1.25	AETHHS	0.7 – 3.0	16.60	12	0.80	10.98	10.65	25.40	12	0.63	11	18.55	11
		3.0 – 5.5	19.10				9.75	27.90					
M10 x 1.5	AETHHS	0.7 – 3.5	20.40	14.2	0.90	13	12.35	32.05	14.2	0.90	13	24.00	13

AECR™ COUNTERSUNK HEAD ROUND BODY INSERTS

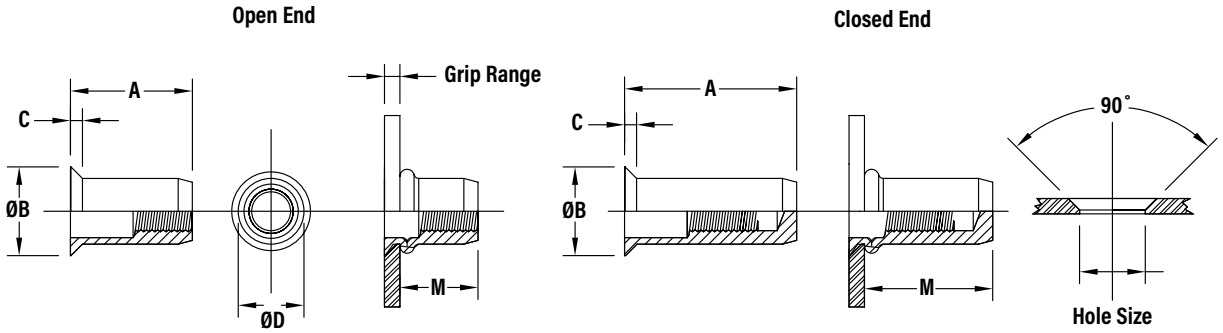

All dimensions are in millimeters.

Thread Size x Pitch	Type Steel	Grip Range	Open A ±0.25	Open ØB ±0.25	Open C ±0.13	Open ØD Max.	Open M Ref.	Closed A ±0.25	Closed ØB ±0.25	Closed C ±0.13	Closed ØD Max.	Closed M Ref.	Hole Size In Sheet +0.1
M3 X 0.5	AECRS	1.7 – 3.5	11.25	7.2	1.4	5	6.00	15.6	7.2	1.4	5	10.35	5
M4 x 0.7	AECRS	1.7 – 3.5	11.5	8.2	1.4	6	5.90	17.6	8.2	1.4	6	12.00	6
M5 x 0.8	AECRS	1.7 – 4.0	13	9.4	1.5	7	6.55	19.0	9.4	1.5	7	12.55	7
		4.0 – 6.5	16				7.05	21.5					
M6 x 1	AECRS	1.7 – 4.5	17	11.5	1.6	9	9.35	23.9	11.5	1.6	9	16.25	9
		4.5 – 6.5	19					25.9					
M8 x 1.25	AECRS	1.7 – 4.5	19	13.5	1.6	11	10.65	26.3	13.5	1.6	11	17.95	11
		4.5 – 6.5	21					28.3					
M10 x 1.5	AECRS	1.7 – 4.5	21	15.5	1.6	13	11.95	32.4	15.5	1.6	13	23.35	13

AECK™ COUNTERSUNK HEAD KNURLED ROUND BODY INSERTS

For recommended installation tool, see tool selector guide on page 50. See page 53 for part number key.

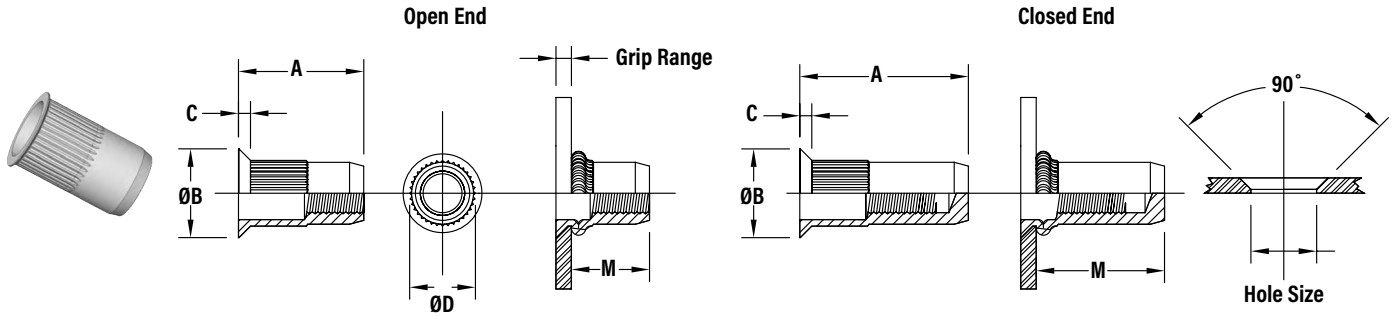

All dimensions are in millimeters.

Thread Size x Pitch	Type	Grip Range	Open					Closed					Hole Size In Sheet +0.1
	Steel		A ±0.25	ØB ±0.25	C ±0.13	ØD Max.	M Ref.	A ±0.25	ØB ±0.25	C ±0.13	ØD Max.	M Ref.	
M3 X 0.5	AECKS	1.7 – 3.5	11.25	7.2	1.4	5	6.00	15.6	7.2	1.4	5	10.35	5
M4 x 0.7	AECKS	1.7 – 3.5	11.5	8.2	1.4	6	5.90	17.6	8.2	1.4	6	12.00	6
M5 x 0.8	AECKS	1.7 – 4.0	13	9.4	1.5	7	6.55	19.0	9.4	1.5	7	12.55	7
		4.0 – 6.5	16				7.05	21.5					
M6 x 1	AECKS	1.7 – 4.5	17	11.5	1.6	9	9.35	23.9	11.5	1.6	9	16.25	9
		4.5 – 6.5	19					25.9					
M8 x 1.25	AECKS	1.7 – 4.5	19	13.5	1.6	11	10.65	26.3	13.5	1.6	11	17.95	11
		4.5 – 6.5	21					28.3					
M10 x 1.5	AECKS	1.7 – 4.5	21	15.5	1.6	13	11.95	32.4	15.5	1.6	13	23.35	13

ATLAS® FM™ MATERIAL AND FINISH SPECIFICATIONS

Code	Material	Threads	Standard Finish
A	Aluminum	Metric, 6H per ASME B1.13M	None
S	Low Carbon Steel	Metric, 6H per ASME B1.13M	RoHS compliant zinc clear per ASTM B 633, Fe/Zn8, Type V
C	Stainless Steel	Metric, 6H per ASME B1.13M	Passivated
B	Brass	Metric, 6H per ASME B1.13M	None

AEH

Photo shown with AES insert assembled in AEH insert. Can also be assembled in an AEK insert.

Half Hex Stud

This insert combines a variety a features; a half-hex, dog point stud with a PVC form seal bonded to the underside of the head.

Wedge Head

Wedges under the head provide greater torque, especially in soft or thin materials.

See page 52 for ordering information.

Sealed Head (1)

A PVC form seal is bonded to the underside of the head to provide a watertight seal. Spec # for sealed head meets GM1131M, type D.

See page 52 for ordering information.

MONEL® Alloy Inserts

AEK inserts are available in MONEL® alloy. They have superior corrosion resistance and are excellent for use in food and medical industries. Many sizes are in stock and available for immediate shipment.

Half Square Shank Insert

Half square shank for extremely high anti-rotation applications.

Insert for Plastics

Special insert for plastics features an oversized head and anti rotational wedges under the head. These features ensure a tight grip and superior spin out protection even if the plastic relaxes.

Insert for Composite Materials

This insert is designed to deal with the unique issues of fastening to composites.

Self-locking Inserts

Addition of a nylon locking element or a mechanical squeeze can provide a prevailing torque locking feature.

ATLAS® ELASTITE™ Nut with Washer

This threaded metal insert and washer encased in a synthetic rubber bushing provides a vibration dampening attachment point in a variety of applications.

Anti Cross-threading Feature

PennEngineering is a licensee for MAThread® anti cross-threading technology. Originally developed for the demands of the automotive industry, this patented design helps speed assembly and eliminates failures, repairs, scrap, downtime, and warranty service associated with thread damage.

(1) Sealant under head can reduce the effective grip range of the insert by .020" - .030" (0.5 - 0.76 mm).

MONEL® is a registered trademark of Special Metals Corporation.

MAThread® is a trademark of MAThread, Inc.

Plus+Tite® — PRE-BULBED INSERT*

- **Designed for superior pullout resistance in plastics and thin sheet metal.**
- **Pre-bulbed design requires less installation load.**

For recommended installation tool, see tool selector guide on page 50.

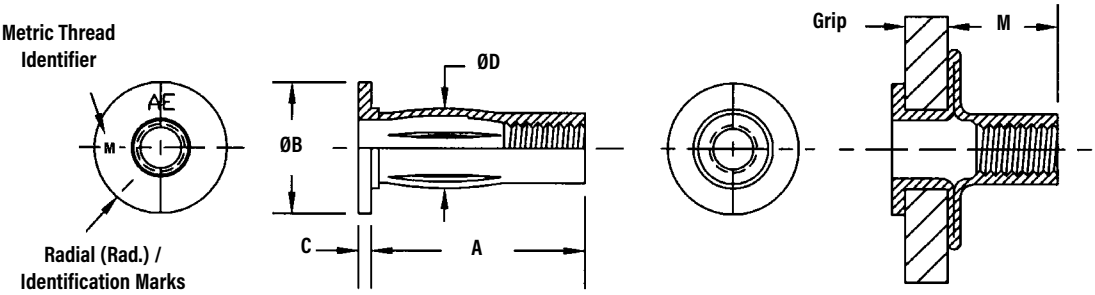

All dimensions are in inches.

Thread Size	Part Number	Grip Range	Identification Mark	A ±.015	ØB Nom.	C Nom.	ØD Max.	M Ref.	Hole Size In Sheet +.006 -.000	Weight lbs./1000
#10-32	AES10P175PBZYR	.020 - .175	None	.781	.500	.038	.329	.425	.336	5.99
#10-32	AES10P320PBZYR	.175 - .320	1 Rad.	.921	.500	.038	.329	.425	.336	8.74
1/4-20	AES25P280PBZYR	.020 - .280	None	1.000	.625	.057	.384	.520	.390	14.87
1/4-20	AES25P500PBZYR	.280 - .500	1 Rad.	1.235	.625	.057	.384	.520	.390	16.81
5/16-18	AES31P280PBZYR	.020 - .280	None	1.141	.750	.062	.495	.775	.500	17.81
5/16-18	AES31P500PBZYR	.280 - .500	1 Rad.	1.375	.750	.062	.495	.775	.500	20.91
3/8-16	AES37P280PBZYR	.020 - .280	None	1.218	.875	.088	.587	.775	.594	19.21

All dimensions are in millimeters.

Thread Size x Pitch	Part Number	Grip Range	Identification Mark	A ±0.38	ØB Nom.	C Nom.	ØD Max.	M Ref.	Hole Size In Sheet +0.15	Weight kg/1000
M6 x 1	AESM6P7.1PBZYR	0.50 - 7.1	None	25.4	15.88	1.45	9.8	13.2	10	6.78
M6 x 1	AESM6P12.7PBZYR	7.1 - 12.7	1 Rad.	31.34	15.88	1.45	9.8	13.2	10	7.84
M8 x 1.25	AESM8P7.1PBZYR	0.50 - 7.1	None	29.25	19.05	1.57	12.57	19.69	12.7	8.71
M8 x 1.25	AESM8P12.7PBZYR	7.1 - 12.7	1 Rad.	34.93	19.05	1.57	12.57	19.69	12.7	9.6
M10 x 1.5	AESM10P7.1PBZYR	0.50 - 7.1	None	30.94	22.2	2.24	14.91	19.69	15.09	11.15

NOTE: *The ATLAS® spin-spin or spin-pull tool can be used to install pre-bulbed inserts (see tool selector guide on page 50). Material hardness will affect the published grip ranges. Trial installations of this product in your application are recommended. We will be happy to provide samples for this purpose.*

**Pre-bulbed inserts require less installation load than straight shank and require slightly larger mounting hole size.*

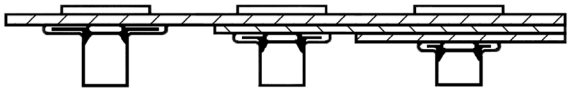

Installs into single, variable, or multiple thickness materials.

MATERIAL & FINISH SPECIFICATIONS

Type	Threads	Standard Material(1)	Standard Finish
AES	Unified, 2B per ASME B1.1 Metric, 6H per ASME B1.13M	Low Carbon Steel	RoHS Compliant Zinc Yellow

(1) Other materials and finishes available.

Part Number Designation

AE	S	25	P	280	PB	ZYR
Type	Material	Thread Code	Plus+Tite Designation	Max. Grip	Pre-bulbed Designation	Finish

- **Designed for superior pullout resistance in plastics and thin sheet metal.**
- **Straight shank design uses smaller mounting hole.**

For recommended installation tool, see tool selector guide on page 50.

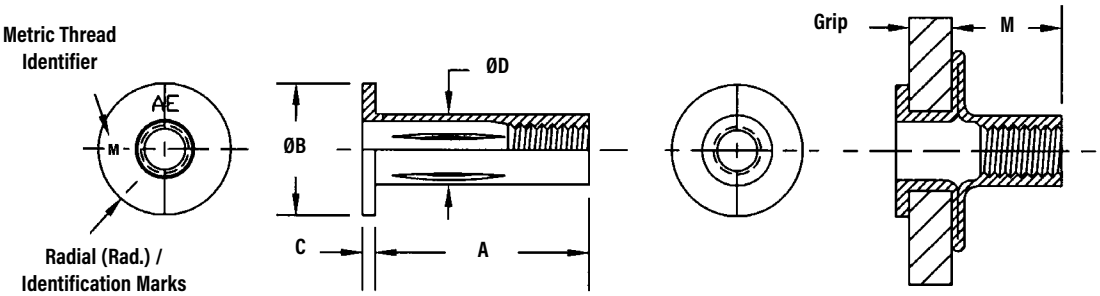

All dimensions are in inches.

Thread Size	Part Number	Grip Range	Identification Mark	A ±.015	ØB Nom.	C Nom.	ØD Max.	M Ref.	Hole Size In Sheet +.006 -.000	Weight lbs./1000
#10-32	AES10P175ZYR	.020 - .175	None	.781	.500	.038	.272	.425	.273	7.93
#10-32	AES10P320ZYR	.175 - .320	1 Rad.	.921	.500	.038	.272	.425	.273	8.79
1/4-20	AES25P280ZYR	.020 - .280	None	1.000	.625	.058	.346	.505	.347	16.21
1/4-20	AES25P500ZYR	.280 - .500	1 Rad.	1.234	.625	.058	.346	.505	.347	18.55
5/16-18	AES31P280ZYR	.020 - .280	None	1.141	.750	.062	.437	.570	.438	28.32
5/16-18	AES31P500ZYR	.280 - .500	1 Rad.	1.375	.750	.062	.437	.570	.438	32.05
3/8-16	AES37P280ZYR	.020 - .280	None	1.218	.875	.088	.514	.605	.515	42.79
3/8-16	AES37P500ZYR	.280 - .500	1 Rad.	1.437	.875	.088	.514	.605	.515	46.82

All dimensions are in millimeters.

Thread Size x Pitch	Part Number	Grip Range	Identification Mark	A ±0.38	ØB Nom.	C Nom.	ØD Max.	M Ref.	Hole Size In Sheet +0.15	Weight kg/1000
M6 x 1	AESM6P7.1ZYR	0.50 - 7.1	None	25.40	15.87	1.5	8.79	12.8	8.8	8.35
M6 x 1	AESM6P12.7ZYR	7.1 - 12.7	1 Rad.	31.32	15.87	1.5	8.79	12.8	8.8	8.36
M8 x 1.25	AESM8P7.1ZYR	0.50 - 7.1	None	28.95	19.04	1.57	11.1	14.47	11.11	13.07
M8 x 1.25	AESM8P12.7ZYR	7.1 - 12.7	1 Rad.	34.90	19.04	1.57	11.1	14.47	11.11	14.6
M10 x 1.5	AESM10P7.1ZYR	0.50 - 7.1	None	30.94	22.23	2.24	13.06	15.75	13.07	18.01
M10 x 1.5	AES10P12.7ZYR	7.1 - 12.7	1 Rad.	36.50	22.23	2.24	13.06	15.75	13.07	22.01

NOTE: *The ATLAS® spin-pull tool is recommended to install straight shank inserts (see tool selector guide on page 50). Material hardness will affect the published grip ranges. Trial installations of this product in your application are recommended. We will be happy to provide samples for this purpose.*

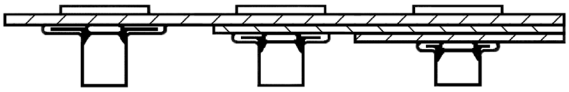

Installs into single, variable, or multiple thickness materials.

MATERIAL & FINISH SPECIFICATIONS

Type	Threads	Standard Material(1)	Standard Finish
AES	Unified, 2B per ASME B1.1 Metric, 6H per ASME B1.13M	Low Carbon Steel	RoHS Compliant Zinc Yellow

(1) Other materials and finishes available.

Part Number Designation

AE	S	25	P	280	ZYR
Type	Material	Thread Code	Plus+Tite Designation	Max. Grip	Finish

- **Designed for high load applications. Countersunk feature allow fastener to be installed flush with sheet surface.**

Keyed Closed End Shown

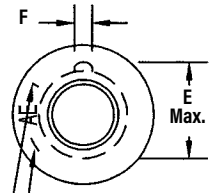

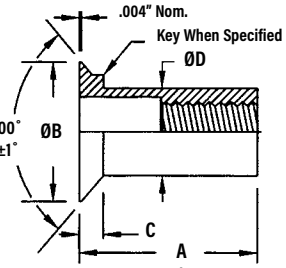

Open End Type

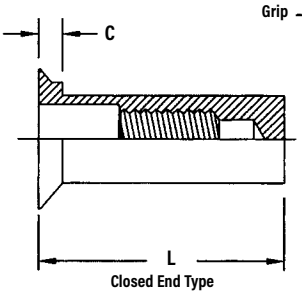

Closed End Type

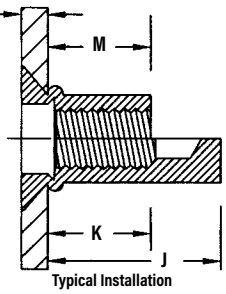

Typical Installation

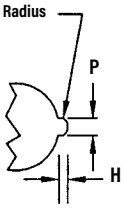

Keyway Detail

All dimensions are in inches. *See page 51 for NAS1330 conversions and page 54 for part number key.* For recommended installation tool, see tool selector guide on page 50.

Thread Size*	ØB Ref.	C Max.	ØD +.000 -.004	E Max.	F +.005 -.000	Install Drill Size (Ref.)	Non-ribbed Inserts Install Hole Size		Ribbed Inserts Install Hole Size		Keyway Dimensions		Pull Up Factor
							Min.	Max.	Min.	Max.	P +.003 -.000	H	
#4-40	.263	.051	.155	.198	.054	5/32	.155	.157	—	—	.062	.046 - .048	.055
#6-32	.323	.063	.189	.240	.054	#12	.189	.193	.196	.200	.062	.056 - .058	.065
#8-32	.355	.063	.221	.271	.054	#2	.221	.226	.227	.233	.062	.056 - .058	.065
#10-32	.391	.065	.250	.302	.054	1/4	.250	.256	.258	.264	.062	.056 - .058	.080
1/4-20	.529	.089	.332	.382	.054	Q	.332	.338	.343	.349	.062	.056 - .058	.095
5/16-18	.656	.104	.413	.505	.120	Z	.413	.423	.422	.428	.128	.097 - .102	.120
3/8-16	.770	.124	.490	.597	.120	12.5 mm	.490	.500	.500	.510	.128	.110 - .115	.155
1/2-13 (1)	.906	.124	.625	.733	.120	5/8	.625	.635	.640	.650	.128	.110 - .115	.185

(1) Before ordering please contact the factory for further information regarding this thread size.

Thread-Grip Number	Grip Range	Indent. Mark	Open End Keyed and Keyless				Closed End Keyless					Closed End Keyed				
			A ±.015	M Ref.	Wt. (lbs./1000)		L ±.015	J Ref.	K Ref.	Wt. (lbs./1000)		L ±.015	J Ref.	K Ref.	Wt. (lbs./1000)	
					Alum.	Steel				Alum.	Steel				Alum.	Steel
4-81	.050 - .081	Blank	.370	.235	.4	1.3	.525	.390	.235	.6	1.9	.525	.390	.235	.6	1.9
4-106	.081 - .106	1 Rad.	.395	.235	.4	1.3	.550	.390	.235	.6	1.9	.550	.390	.235	.6	1.9
4-131	.106 - .131	2 Rad.	.420	.235	.4	1.4	.575	.390	.235	.7	2.0	.575	.390	.235	.7	2.0
4-156	.131 - .156	3 Rad.	.450	.235	.5	1.4	.600	.390	.235	.7	2.0	.600	.390	.235	.7	2.0
4-181	.156 - .181	4 Rad.	.475	.235	.5	1.5	.625	.390	.235	.7	2.1	.625	.390	.235	.7	2.1
4-206	.181 - .206	5 Rad.	.500	.235	.5	1.5	.650	.390	.235	.7	2.1	.650	.390	.235	.7	2.1
6-106	.065 - .106	Blank	.500	.325	.8	2.5	.687	.510	.325	1.2	3.6	.812	.635	.425	1.4	4.2
6-161	.106 - .161	2 Rad.	.500	.280	.8	2.4	.687	.465	.280	1.2	3.5	.812	.590	.380	1.3	4.1
6-201	.161 - .201	4 Rad.	.562	.295	.9	2.6	.687	.420	.260	1.1	3.4	.812	.545	.335	1.3	4.0
6-241	.201 - .241	1 Circ.	.625	.315	.9	2.9	.812	.505	.295	1.3	4.0	.812	.505	.295	1.3	4.0
6-281	.241 - .281	2 Circ.	.625	.270	.9	2.8	.812	.465	.265	1.3	3.9	.812	.465	.265	1.3	3.9
6-321	.281 - .321	3 Circ.	.687	.290	1.0	3.0	.844	.455	.265	1.3	4.0	.844	.455	.265	1.3	4.0
8-106	.065 - .106	Blank	.500	.325	1.0	3.1	.687	.510	.325	1.5	4.6	.812	.635	.425	1.8	5.4
8-161	.106 - .161	2 Rad.	.500	.280	1.0	3.0	.687	.465	.280	1.5	4.5	.812	.590	.380	1.7	5.3
8-201	.161 - .201	4 Rad.	.562	.290	1.1	3.3	.687	.415	.255	1.4	4.4	.812	.540	.330	1.7	5.2
8-241	.201 - .241	1 Circ.	.625	.310	1.2	3.6	.875	.560	.290	1.8	5.5	.875	.560	.290	1.8	5.5
8-281	.241 - .281	2 Circ.	.687	.325	1.1	3.2	.875	.515	.290	1.8	5.4	.875	.515	.290	1.8	5.4
8-321	.281 - .321	3 Circ.	.687	.295	1.2	3.8	.875	.485	.300	1.7	5.2	.875	.485	.300	1.7	5.2
10-116	.065 - .116	Blank	.578	.395	1.4	4.3	.828	.645	.395	2.2	6.7	.828	.645	.395	2.2	6.7
10-166	.116 - .166	1 Rad.	.625	.385	1.5	4.6	.875	.635	.385	2.3	6.9	.875	.635	.385	2.3	6.9
10-216	.166 - .216	2 Rad.	.687	.400	1.6	4.9	.938	.650	.400	2.4	7.2	.938	.650	.400	2.4	7.2
10-266	.216 - .266	3 Rad.	.734	.390	1.7	5.1	.984	.640	.390	2.5	7.5	.984	.640	.390	2.5	7.5
10-316	.266 - .316	4 Rad.	.781	.385	1.8	5.4	1.031	.635	.385	2.5	7.7	1.031	.635	.385	2.5	7.7
10-366	.316 - .366	5 Rad.	.844	.400	1.9	5.7	1.094	.650	.400	2.6	8.0	1.094	.650	.400	2.6	8.0
25-151	.089 - .151	Blank	.687	.440	3.2	9.8	1.000	.750	.435	5.0	15.1	1.000	.750	.435	5.0	15.1
25-211	.151 - .211	1 Rad.	.750	.440	3.4	10.3	1.062	.750	.435	5.2	15.7	1.062	.750	.435	5.2	15.7
25-271	.211 - .271	2 Rad.	.812	.440	3.6	10.9	1.125	.750	.435	5.4	16.3	1.125	.750	.435	5.4	16.3
25-331	.271 - .331	3 Rad.	.875	.435	3.8	11.5	1.187	.750	.435	5.5	16.9	1.187	.750	.435	5.5	16.9
25-391	.331 - .391	4 Rad.	.937	.435	4.0	12.1	1.250	.750	.435	5.7	17.5	1.250	.750	.435	5.7	17.5
25-451	.391 - .451	5 Rad.	1.000	.445	4.2	12.7	1.312	.760	.445	5.9	18.1	1.312	.760	.445	5.9	18.1
31-181	.106 - .181	Blank	.844	.540	5.9	17.8	1.218	.915	.540	9.0	27.5	1.218	.915	.540	9.0	27.5
31-256	.181 - .256	1 Rad.	.937	.560	6.3	19.3	1.312	.935	.560	9.5	28.9	1.312	.935	.560	9.5	29.0
31-331	.256 - .331	2 Rad.	1.000	.550	6.6	20.1	1.406	.955	.550	10.0	30.4	1.406	.955	.550	10.0	30.5
31-406	.331 - .406	3 Rad.	1.093	.565	7.1	21.5	1.468	.940	.565	10.2	31.1	1.468	.940	.565	10.2	31.2
31-481	.406 - .481	4 Rad.	1.156	.555	7.3	22.3	1.562	.960	.555	10.7	32.6	1.562	.960	.555	10.8	32.7
31-556	.481 - .556	5 Rad.	1.250	.575	7.8	23.7	1.625	.950	.575	10.9	33.3	1.625	.950	.575	11.0	33.4
37-211	.125 - .211	Blank	.938	.580	8.9	27.0	1.375	1.020	.655	13.9	42.3	1.375	1.020	.655	13.9	42.4
37-296	.211 - .296	1 Rad.	1.031	.590	9.4	28.7	1.468	1.030	.655	14.5	44.1	1.468	1.030	.655	14.5	44.1
37-381	.296 - .381	2 Rad.	1.125	.600	10.0	30.5	1.562	1.040	.675	15.0	45.8	1.562	1.040	.675	15.1	45.9
37-466	.381 - .466	3 Rad.	1.219	.615	10.6	32.3	1.656	1.050	.690	15.6	47.6	1.656	1.050	.690	15.7	47.7
37-551	.466 - .551	4 Rad.	1.312	.625	11.2	34.0	1.750	1.065	.705	16.2	49.4	1.750	1.065	.705	16.2	49.5
37-636	.551 - .636	5 Rad.	1.422	.650	11.9	36.2	1.859	1.090	.715	16.9	51.6	1.859	1.090	.715	17.0	51.7
50-226	.125 - .226	Blank	.984	.610	14.0	43.2	1.406	1.030	.610	21.9	66.6	1.406	1.030	.610	21.9	66.6
50-326	.226 - .326	1 Rad.	1.094	.620	15.0	45.7	1.515	1.040	.620	22.9	69.7	1.515	1.040	.620	22.9	69.7
50-426	.326 - .426	2 Rad.	1.218	.640	16.2	49.2	1.625	1.050	.640	23.8	72.6	1.625	1.050	.640	23.8	72.6
50-526	.426 - .526	3 Rad.	1.312	.635	16.9	51.6	1.750	1.075	.635	25.0	76.3	1.750	1.075	.635	25.0	76.3

** Both UNC and UNF threads available in No. 10 and larger thread sizes. Check for availability of other grip ranges and designs.*

Weights: *For brass fasteners, multiply weight of aluminum equivalent by 3.13. Weights for CH (4037 alloy steel) and SS (Type 430 stainless steel) same as steel.*

- **Designed for high load applications. Countersunk feature allow fastener to be installed flush with sheet surface.**

Keyless Open End Shown

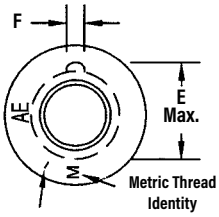

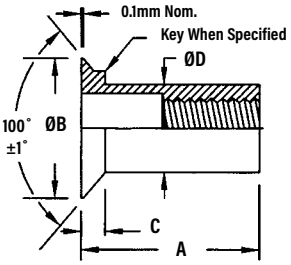

Open End Type

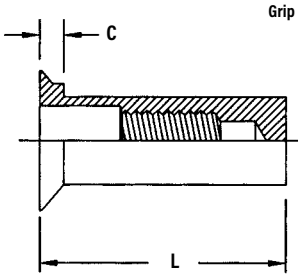

Closed End Type

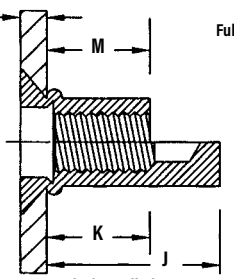

Typical Installation

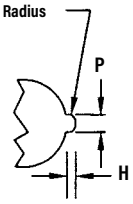

Keyway Detail

All dimensions are in millimeters.

See page 54 for part number key.

For recommended installation tool, see tool selector guide on page 50.

Thread Size x Pitch	ØB Ref.	C Max.	ØD -0.1	E Max.	F +0.13 (Ref.)	Install Drill Size	Non-ribbed Inserts Install Hole Size		Ribbed Inserts Install Hole Size		Keyway Dimensions		Pull Up Factor
							Min.	Max.	Min.	Max.	P +0.08	H	
M3 x 0.5	6.68	1.29	3.93	5.03	1.37	4	3.94	4.01	—	—	1.57	1.17 - 1.22	1.4
M4 x 0.7	9.01	1.6	5.61	6.88	1.37	5.6	5.6	5.74	5.77	5.87	1.57	1.42 - 1.47	1.9
M5 x 0.8	11.17	1.83	7.13	8.73	1.85	7.2	7.2	7.3	7.4	7.5	2.06	1.7 - 1.75	2.4
M6 x 1	13.43	2.26	8.43	10.33	2.23	8.5	8.5	8.6	8.71	8.86	2.44	2.06 - 2.13	2.92
M8 x 1.25	16.65	2.64	10.48	12.82	3.05	10.5	10.5	10.75	10.72	10.87	3.25	2.46 - 2.59	3.18
M10 x 1.5	19.50	3.15	12.44	15.15	3.05	12.5	12.5	12.7	12.78	12.95	3.25	2.79 - 2.92	3.94
M12 x 1.75	22.79	3.15	15.88	18.6	3.05	15.9	15.9	16.13	16.26	16.51	3.25	2.79 - 2.92	4.7

Thread-Grip Number	Grip Range	Indent. Mark	Open End Keyed and Keyless				Closed End Keyed and Keyless				
			A ±0.38	M Ref.	Wt. (kg/1000)		L ±0.38	J Ref.	K Ref.	Wt. (kg/1000)	
					Alum.	Steel				Alum.	Steel
M3 - 2.1	1.29 - 2.1	Blank	9	5.48	0.3	1	13	9.52	5.48	0.5	1.6
M3 - 2.86	2.1 - 2.86	1 Rad.	9.75	5.48	0.4	1.1	13.75	9.52	5.48	0.6	1.7
M3 - 3.6	2.86 - 3.6	2 Rad.	10.5	5.48	0.4	1.2	14.5	9.52	5.48	0.6	1.8
M3 - 4.36	3.6 - 4.36	3 Rad.	11.25	5.48	0.4	1.2	15.25	9.52	5.48	0.6	1.8
M3 - 5.1	4.36 - 5.1	4 Rad.	12	5.48	0.4	1.2	16	9.52	5.48	0.6	1.8
M3 - 5.86	5.1 - 5.86	5 Rad.	12.75	5.48	0.4	1.3	16.75	9.52	5.48	0.6	1.9
M4 - 3.1	1.6 - 3.1	Blank	12	6.98	0.45	1.36	16.5	11.5	6.98	0.68	2.09
M4 - 4.1	3.1 - 4.1	1 Rad.	13	6.98	0.45	1.45	17.5	11.5	6.98	0.73	2.13
M4 - 5.1	4.1 - 5.1	2 Rad.	14	6.98	0.5	1.54	18.5	11.5	6.98	0.73	2.18
M4 - 6.1	5.1 - 6.1	3 Rad.	15	6.98	0.5	1.59	19.5	11.5	6.98	0.73	2.27
M4 - 7.1	6.1 - 7.1	4 Rad.	16	6.98	0.54	1.68	20.5	11.5	6.98	0.77	2.36
M4 - 8.1	7.1 - 8.1	5 Rad.	17	6.98	0.54	1.72	21.5	11.5	6.98	0.82	2.4
M5 - 3.6	1.8 - 3.6	Blank	16	9.98	0.95	2.86	22	15.97	9.98	1.41	4.31
M5 - 5.1	3.6 - 5.1	1 Rad.	17.5	9.98	1	2.99	23.5	15.97	9.98	1.45	4.45
M5 - 6.6	5.1 - 6.6	2 Rad.	19	9.98	1.04	3.18	25	15.97	9.98	1.5	4.58
M5 - 8.1	6.6 - 8.1	3 Rad.	20.5	9.98	1.09	3.31	26.5	15.97	9.98	1.54	4.76
M5 - 9.6	8.1 - 9.6	4 Rad.	22	9.98	1.13	3.45	28	15.97	9.98	1.59	4.9
M5 - 11.1	9.6 - 11.1	5 Rad.	23.5	9.98	1.18	3.63	29.5	15.97	9.98	1.68	5.08
M6 - 4.1	2.25 - 4.1	Blank	18	10.96	1.5	4.58	25	17.97	10.96	2.27	6.85
M6 - 5.6	4.1 - 5.6	1 Rad.	19.5	10.96	1.59	4.81	26.5	17.97	10.96	2.31	7.08
M6 - 7.1	5.6 - 7.1	2 Rad.	21	10.96	1.63	5.03	28	17.97	10.96	2.41	7.26
M6 - 8.6	7.1 - 8.6	3 Rad.	22.5	10.96	1.72	5.26	29.5	17.97	10.96	2.5	7.48
M6 - 10.1	8.6 - 10.1	4 Rad.	24	10.96	1.81	5.53	31	17.97	10.96	2.54	7.76
M6 - 11.6	10.1 - 11.6	5 Rad.	25.5	10.96	1.91	5.76	32.5	17.97	10.96	2.63	8.03
M8 - 5.1	2.69 - 5.1	Blank	20.5	12.23	2.36	7.21	28.5	20.23	12.23	3.58	10.98
M8 - 7.1	5.1 - 7.1	1 Rad.	22.5	12.23	2.5	7.58	30.5	20.23	12.23	3.77	11.43
M8 - 9.1	7.1 - 9.1	2 Rad.	24.5	12.23	2.63	8.03	32.5	20.23	12.23	3.86	11.79
M8 - 11.1	9.1 - 11.1	3 Rad.	26.5	12.23	2.77	8.44	34.5	20.23	12.23	4.04	12.25
M8 - 13.1	11.1 - 13.1	4 Rad.	28.5	12.23	2.9	8.89	36.5	20.23	12.23	4.13	12.61
M8 - 15.1	13.1 - 15.1	5 Rad.	30.5	12.23	3.04	9.25	38.5	20.23	12.23	4.31	13.11
M10 - 6.1	3.17 - 6.1	Blank	23	12.72	3.45	10.48	31.5	21.47	12.72	5.17	15.74
M10 - 8.6	6.1 - 8.6	1 Rad.	25.5	12.72	3.63	11.07	34	21.47	12.72	5.35	16.33
M10 - 11.1	8.6 - 11.1	2 Rad.	28	12.72	3.81	11.66	36.5	21.47	12.72	5.53	16.87
M10 - 13.6	11.1 - 13.6	3 Rad.	30.5	12.72	4.04	12.25	39	21.47	12.72	5.76	17.51
M10 - 16.1	13.6 - 16.1	4 Rad.	33	12.72	4.22	12.88	41.5	21.47	12.72	5.94	18.05
M12 - 6.1	3.17 - 6.1	Blank	27	16.35	6.44	19.6	35	24.34	16.35	9.21	27.99
M12 - 8.6	6.1 - 8.6	1 Rad.	29.5	16.35	6.85	20.87	37.5	24.34	16.35	9.57	29.21
M12 - 11.1	8.6 - 11.1	2 Rad.	32	16.35	7.21	21.91	40	24.34	16.35	9.93	30.3
M12 - 13.6	11.1 - 13.6	3 Rad.	34.5	16.35	7.67	23.31	42.5	24.34	16.35	10.39	31.66
M12 - 16.1	13.6 - 16.1	4 Rad.	37	16.35	8.03	24.45	45	24.34	16.35	10.8	32.93

Weights: *For brass fasteners, multiply weight of aluminum equivalent by 3.13. Weights for CH (4037 alloy steel) and SS (Type 430 stainless steel) same as steel.*

- **Designed for high load applications. Available with rib, key or full hex features for high torque applications.**

Keyless Open End Shown

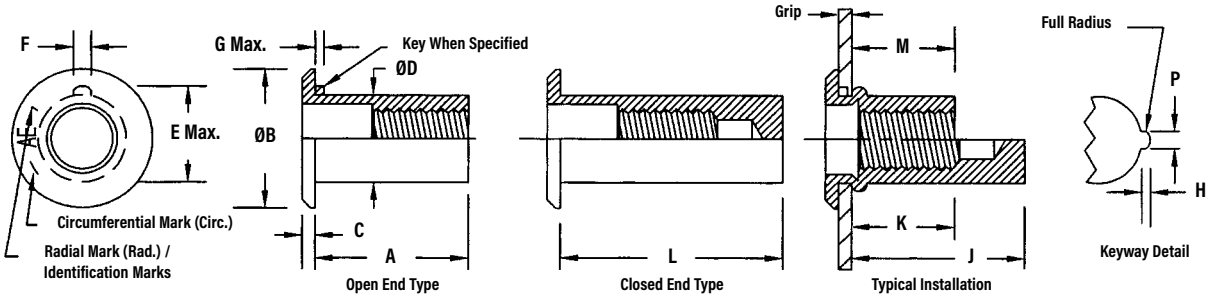

All dimensions are in inches. *See page 51 for NAS1329 conversions and page 54 for part number key.*

For recommended installation tool, see tool selector guide on page 50.

Thread Size*	ØB ±.015	C Nom.	ØD +.000 -.004	E Max.	F +.005 -.000	G Max.	Install Drill Size (Ref.)	Non-ribbed Inserts Install Hole Size		Ribbed Inserts Install Hole Size		Keyway Dimensions		Pull Up Factor
								Min.	Max.	Min.	Max.	P +.003 -.000	H	
#4-40	.270	.025	.155	.198	.054	.023	5/32	.155	.157	—	—	.062	.046 - .048	.055
#6-32	.325	.032	.189	.240	.054	.023	#12	.189	.193	.196	.200	.062	.056 - .058	.065
#8-32	.357	.032	.221	.271	.054	.023	#2	.221	.226	.227	.233	.062	.056 - .058	.065
#10-32	.406	.038	.250	.302	.054	.023	1/4	.250	.256	.258	.264	.062	.056 - .058	.080
1/4-20	.475	.058	.332	.382	.054	.035	Q	.332	.338	.343	.349	.062	.056 - .058	.095
5/16-18	.665	.062	.413	.505	.120	.040	Z	.413	.423	.422	.428	.128	.097 - .102	.120
3/8-16	.781	.088	.490	.597	.120	.040	12.5 mm	.490	.500	.500	.510	.128	.110 - .115	.155
1/2-13 (1)	.906	.085	.625	.733	.120	.040	5/8	.625	.635	.640	.650	.128	.110 - .115	.185

(1) Before ordering please contact the factory for further information regarding this thread size.

Thread-Grip Number	Grip Range	Indent. Mark	Open End Keyed and Keyless				Closed End Keyless					Closed End Keyed				
			A ±.015	M Ref.	Wt. (lbs./1000) Alum.	Wt. (lbs./1000) Steel	L ±.015	J Ref.	K Ref.	Wt. (lbs./1000) Alum.	Wt. (lbs./1000) Steel	L ±.015	J Ref.	K Ref.	Wt. (lbs./1000) Alum.	Wt. (lbs./1000) Steel
4-60	.010 - .060	Blank	.345	.230	.4	1.3	.500	.385	.230	.6	1.9	.500	.385	.230	.6	1.9
4-85	.060 - .085	1 Rad.	.370	.230	.4	1.4	.525	.385	.230	.7	2.0	.525	.385	.230	.7	2.0
4-110	.085 - .110	2 Rad.	.400	.230	.5	1.4	.555	.390	.230	.7	2.0	.555	.390	.230	.7	2.0
4-135	.110 - .135	3 Rad.	.425	.230	.5	1.5	.580	.385	.230	.7	2.1	.580	.385	.230	.7	2.1
4-160	.135 - .160	4 Rad.	.450	.230	.5	1.5	.605	.385	.230	.7	2.1	.605	.385	.230	.7	2.1
4-185	.160 -.185	5 Rad.	.480	.230	.5	1.6	.635	.385	.230	.7	2.2	.635	.385	.230	.7	2.2
6-75	.010 - .075	1 Rad.	.438	.300	.8	2.4	.625	.490	.305	1.2	3.5	.750	.615	.405	1.4	4.1
6-120	.075 - .120	3 Rad.	.500	.315	.9	2.6	.625	.440	.255	1.1	3.4	.750	.565	.355	1.3	4.0
6-160	.120 - .160	5 Rad.	.500	.270	.9	2.6	.750	.520	.260	1.3	4.0	.750	.520	.310	1.3	4.0
6-200	.160 - .200	1 Circ.	.562	.290	.9	2.8	.750	.480	.260	1.3	3.9	.750	.480	.260	1.3	3.9
6-240	.200 - .240	2 Circ.	.625	.310	1.0	3.0	.750	.435	.260	1.3	3.8	.750	.435	.260	1.3	3.8
6-280	.240 - .280	3 Circ.	.687	.330	1.1	3.3	.812	.455	.265	1.3	4.1	.812	.455	.265	1.3	4.1
8-75	.010 - .075	1 Rad.	.438	.300	1.0	3.0	.625	.490	.305	1.5	4.5	.750	.615	.405	1.7	5.3
8-120	.075 - .120	3 Rad.	.500	.315	1.1	3.3	.625	.440	.255	1.4	4.4	.750	.565	.355	1.7	5.2
8-160	.120 - .160	5 Rad.	.500	.270	1.1	3.2	.750	.520	.260	1.7	5.1	.750	.520	.310	1.7	5.1
8-200	.160 - .200	1 Circ.	.625	.350	1.3	3.9	.750	.475	.265	1.6	5.0	.750	.475	.265	1.6	5.0
8-240	.200 - .240	2 Circ.	.625	.305	1.2	3.8	.875	.555	.310	1.9	5.6	.875	.555	.310	1.9	5.6
8-280	.240 - .280	3 Circ.	.687	.340	1.3	4.1	.875	.530	.290	1.8	5.6	.875	.530	.290	1.8	5.6
10-80	.010 - .080	Blank	.531	.380	1.5	4.5	.781	.630	.380	2.3	6.8	.781	.630	.380	2.3	6.8
10-130	.080 - .130	1 Rad.	.594	.390	1.6	4.9	.843	.640	.390	2.4	7.2	.843	.640	.390	2.4	7.2
10-180	.130 - .180	2 Rad.	.641	.390	1.7	5.1	.891	.640	.390	2.4	7.4	.891	.640	.390	2.4	7.4
10-230	.180 - .230	3 Rad.	.703	.395	1.8	5.4	.953	.645	.395	2.6	7.8	.953	.645	.395	2.6	7.8
10-280	.230 - .280	4 Rad.	.750	.395	1.9	5.7	1.000	.645	.395	2.6	8.0	1.000	.645	.395	2.6	8.0
10-330	.280 - .330	5 Rad.	.797	.385	1.9	5.9	1.047	.630	.385	2.7	8.2	1.047	.630	.385	2.7	8.2
25-80	.020 - .080	Blank	.625	.450	3.2	9.7	.937	.760	.440	4.9	15.1	.937	.760	.440	5.0	15.1
25-140	.080 - .140	1 Rad.	.687	.450	3.4	10.3	1.000	.760	.440	5.1	15.7	1.000	.760	.440	5.1	15.7
25-200	.140 - .200	2 Rad.	.750	.450	3.6	10.9	1.062	.760	.440	5.3	16.2	1.062	.760	.440	5.3	16.3
25-260	.200 - .260	3 Rad.	.812	.445	3.8	11.5	1.125	.755	.445	5.5	16.8	1.125	.755	.445	5.5	16.8
25-320	.260 - .320	4 Rad.	.875	.445	4.0	12.0	1.187	.755	.445	5.7	17.4	1.187	.755	.445	5.7	17.4
25-380	.320 - .380	5 Rad.	.937	.445	4.1	12.6	1.250	.755	.445	5.9	18.0	1.250	.755	.445	5.9	18.0
31-125	.030 - .125	Blank	.750	.505	6.0	18.2	1.187	.940	.550	9.6	29.1	1.187	.940	.550	9.6	29.2
31-200	.125 - .200	1 Rad.	.875	.555	6.7	20.3	1.281	.960	.555	10.1	30.6	1.281	.960	.555	10.1	30.7
31-275	.200 - .275	2 Rad.	.937	.540	6.9	21.1	1.343	.950	.560	10.3	31.4	1.343	.950	.560	10.3	31.5
31-350	.275 - .350	3 Rad.	1.032	.560	7.4	22.6	1.437	.965	.570	10.8	32.9	1.437	.965	.570	10.8	32.9
31-425	.350 - .425	4 Rad.	1.125	.580	7.9	24.0	1.531	.985	.575	11.3	34.3	1.531	.985	.575	11.3	34.4
31-500	.425 - .500	5 Rad.	1.187	.565	8.2	24.9	1.593	.975	.580	11.5	35.1	1.593	.975	.580	11.6	35.2
37-115	.030 - .115	Blank	.844	.585	9.7	29.7	1.281	1.020	.660	14.8	45.0	1.281	1.020	.660	14.8	45.1
37-200	.115 - .200	1 Rad.	.938	.595	10.3	31.4	1.375	1.030	.670	15.4	46.8	1.375	1.030	.670	15.4	46.9
37-285	.200 - .285	2 Rad.	1.031	.605	10.9	33.2	1.468	1.040	.680	15.9	48.5	1.468	1.040	.680	16.0	48.6
37-370	.285 - .370	3 Rad.	1.125	.615	11.5	34.9	1.562	1.050	.690	16.5	50.3	1.562	1.050	.690	16.5	50.4
37-455	.370 - .455	4 Rad.	1.218	.630	12.0	36.7	1.656	1.065	.710	17.1	52.1	1.656	1.065	.710	17.1	52.2
37-540	.455 - .540	5 Rad.	1.312	.635	12.6	38.5	1.750	1.075	.715	17.7	53.8	1.750	1.075	.715	17.7	53.9
50-150	.050 - .150	Blank	.906	.605	14.0	42.6	1.328	1.030	.605	21.9	66.6	1.328	1.030	.605	21.9	66.6
50-250	.150 - .250	1 Rad.	1.031	.630	15.2	46.3	1.453	1.055	.630	23.1	70.3	1.453	1.055	.630	23.1	70.3
50-350	.250 - .350	2 Rad.	1.141	.640	16.2	49.2	1.562	1.060	.640	24.0	73.2	1.562	1.060	.640	24.0	73.2
50-450	.350 - .450	3 Rad.	1.250	.650	17.1	52.2	1.671	1.070	.650	25.0	76.1	1.671	1.070	.650	25.0	76.1

** Both UNC and UNF threads available in No. 10 and larger thread sizes. Check for availability of other grip ranges and designs.*

Weights: *For brass fasteners, multiply weight of aluminum equivalent by 3.13. Weights for CH (4037 alloy steel) and SS (Type 430 stainless steel) same as steel.*

- **Designed for high load applications. Available with rib, key or full hex features for high torque applications.**

Keyed Open End shown

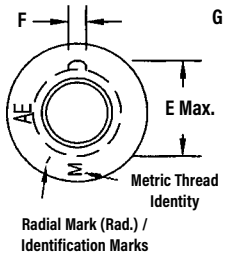

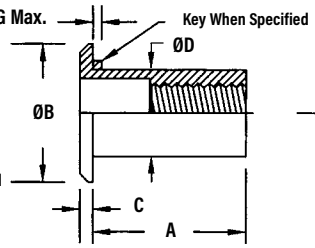

Open End Type

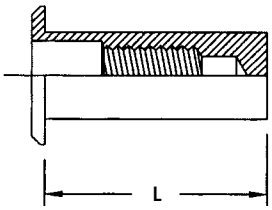

Closed End Type

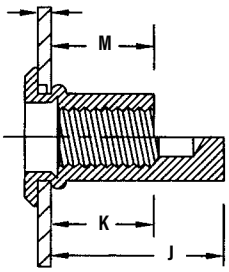

Typical Installation

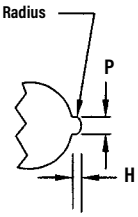

Keyway Detail

All dimensions are in millimeters.

See page 54 for part number key.

For recommended installation tool, see tool selector guide on page 50.

Thread Size x Pitch	ØB ±0.38	C Nom.	ØD -0.1	E Max.	F +0.13	G Max.	Install Drill Size (Ref.)	Non-ribbed Inserts Install Hole Size		Ribbed Inserts Install Hole Size		Keyway Dimensions		Pull Up Factor
								Min.	Max.	Min.	Max.	P +0.08	H	
M3 x 0.5	6.68	0.63	3.93	5.03	1.37	0.58	4	3.94	4.01	—	—	1.57	1.17 - 1.22	1.4
M4 x 0.7	9.01	0.81	5.61	6.88	1.37	0.58	5.6	5.6	5.74	5.77	5.87	1.57	1.42 - 1.47	1.9
M5 x 0.8	11.17	1.22	7.13	8.73	1.85	0.58	7.2	7.2	7.3	7.4	7.5	2.06	1.7 - 1.75	2.4
M6 x 1	13.43	1.47	8.43	10.33	2.23	0.89	8.5	8.5	8.6	8.71	8.86	2.44	2.06 - 2.13	2.9
M8 x 1.25	16.65	1.57	10.48	12.82	3.05	1.02	10.5	10.5	10.75	10.72	10.87	3.25	2.46 - 2.59	3.18
M10 x 1.5	19.5	2.23	12.44	15.15	3.05	1.02	12.5	12.5	12.7	12.78	12.95	3.25	2.79 - 2.92	3.94
M12 x 1.75	22.79	2.23	15.88	18.6	3.05	1.02	15.9	15.9	16.13	16.26	16.51	3.25	2.79 - 2.92	4.7

Thread-Grip Number	Grip Range	Indent. Mark	Open End Keyed and Keyless				Closed End Keyed and Keyless				
			A ±0.38	M Ref.	Wt. (kg/1000)		L ±0.38	J Ref.	K Ref.	Wt. (kg/1000)	
					Alum.	Steel				Alum.	Steel
M3 - 1	0.25 - 1	Blank	8	5.61	0.3	1	12	9.62	5.61	0.5	1.6
M3 - 1.75	1 - 1.75	1 Rad.	8.75	5.61	0.4	1.1	12.75	9.62	5.61	0.5	1.7
M3 - 2.5	1.75 - 2.5	2 Rad.	9.5	5.61	0.4	1.1	13.5	9.62	5.61	0.6	1.7
M3 - 3.25	2.5 - 3.25	3 Rad.	10.25	5.61	0.4	1.2	14.24	9.62	5.61	0.6	1.7
M3 - 4	3.25 - 4	4 Rad.	11	5.61	0.4	1.2	15	9.62	5.61	0.6	1.8
M3 - 4.75	4 - 4.75	5 Rad.	11.75	5.61	0.4	1.3	15.75	9.62	5.61	0.6	1.9
M4 - 2.0	0.25 - 2	Blank	11	7.08	0.45	1.41	16	12.08	7.08	0.73	2.27
M4 - 3.0	2 - 3	1 Rad.	12	7.08	0.5	1.5	17	12.08	7.08	0.77	2.36
M4 - 4.0	3 - 4	2 Rad.	13	7.08	0.5	1.54	18	12.08	7.08	0.82	2.4
M4 - 5.0	4 - 5	3 Rad.	14	7.08	0.54	1.59	19	12.08	7.08	0.82	2.5
M4 - 6.0	5 - 6	4 Rad.	15	7.08	0.54	1.68	20	12.08	7.08	0.86	2.59
M4 - 7.0	6 - 7	5 Rad.	16	7.08	0.59	1.72	21	12.08	7.08	0.86	2.63
M5 - 2.0	0.25 - 2	Blank	14.5	10.09	1	2.99	20	15.6	10.09	1.36	4.22
M5 - 3.5	2 - 3.5	1 Rad.	16	10.09	1.04	3.13	21.5	15.6	10.09	1.45	4.35
M5 - 5.0	3.5 - 5	2 Rad.	17.5	10.09	1.09	3.27	23	15.6	10.09	1.45	4.49
M5 - 6.5	5 - 6.5	3 Rad.	19	10.09	1.13	3.4	24.5	15.6	10.09	1.54	4.67
M5 - 8.0	6.5 - 8	4 Rad.	20.5	10.09	1.18	3.58	26	15.6	10.09	1.59	4.81
M5 - 9.5	8 - 9.5	5 Rad.	22	10.09	1.22	3.72	27.5	15.6	10.09	1.63	5.04
M6 - 2.0	0.75 - 2	Blank	15.5	10.58	1.54	4.67	23	18.07	10.58	2.31	7.03
M6 - 3.5	2 - 3.5	1 Rad.	17	10.58	1.59	4.85	24.5	18.07	10.58	2.4	7.26
M6 - 5.0	3.5 - 5	2 Rad.	18.5	10.58	1.68	5.08	26	18.07	10.58	2.45	7.48
M6 - 6.5	5 - 6.5	3 Rad.	20	10.58	1.72	5.31	27.5	18.07	10.58	2.54	7.71
M6 - 8.0	6.5 - 8	4 Rad.	21.5	10.58	1.81	5.53	29	18.07	10.58	2.59	7.94
M6 - 9.5	8 - 9.5	5 Rad.	23	10.58	1.91	5.76	30.5	18.07	10.58	2.68	8.17
M8 - 3.0	0.75 - 3	Blank	18	11.83	2.36	7.21	26	19.82	11.83	3.58	10.89
M8 - 5.0	3 - 5	1 Rad.	20	11.83	2.59	7.67	28	19.82	11.83	3.72	11.34
M8 - 7.0	5 - 7	2 Rad.	22	11.83	2.68	8.12	30	19.82	11.83	3.9	11.79
M8 - 9.0	7 - 9	3 Rad.	24	11.83	2.81	8.62	32	19.82	11.83	4.04	12.34
M8 - 11.0	9 - 11	4 Rad.	26	11.83	2.95	8.94	34	19.82	11.83	4.13	12.61
M8 - 13.0	11 - 13	5 Rad.	28	11.83	3.08	9.43	36	19.82	11.83	4.31	13.06
M10 - 3.0	1 - 3	Blank	20	13.2	3.63	11.11	29	22.18	13.2	5.53	16.92
M10 - 5.5	3 - 5.5	1 Rad.	22.5	13.2	3.86	11.75	31.5	22.18	13.2	5.72	17.42
M10 - 8.0	5.5 - 8	2 Rad.	25	13.2	4.04	12.25	34	22.18	13.2	5.94	17.92
M10 - 10.5	8 - 10.5	3 Rad.	27.5	13.2	4.22	12.88	36.5	22.18	13.2	6.08	18.6
M10 - 13.0	10.5 - 13	4 Rad.	30	13.2	4.4	13.43	39	22.18	13.2	6.26	19.1
M12 - 3.0	1 - 3	Blank	24	16.45	6.76	20.64	32	24.44	16.45	9.57	29.08
M12 - 5.5	3 - 5.5	1 Rad.	26.5	16.45	7.21	21.91	34.5	24.44	16.45	9.93	30.26
M12 - 8.0	5.5 - 8	2 Rad.	29	16.45	7.53	23	37	24.44	16.45	10.3	31.43
M12 - 10.5	8 - 10.5	3 Rad.	31.5	16.45	7.98	24.27	39.5	24.44	16.45	10.71	32.61
M12 - 13.0	10.5 - 13	4 Rad.	34	16.45	8.39	25.54	42	24.44	16.45	11.11	33.88

Weights: *For brass fasteners, multiply weight of aluminum equivalent by 3.13. Weights for CH (4037 alloy steel) and SS (Type 430 stainless steel) same as steel.*

TORQUE STRENGTH DATA - TORQUE-AXIAL LOAD RELATIONSHIP

When used with a non-rotating mating part, these fasteners may be safely loaded to a torque equivalent of their maximum upset loads. Surpassing these loads will cause the screw to break, or the fastener will continue to upset until ultimate strip load is attained.

Because of the many variables such as type of lubrication, plating, type and grade of screw or bolt, it is recommended that a pilot test be conducted to determine the optimum application torque.

Thread Size	Application Torque (in. lbs.) (1)			
	Fastener Material			
	Aluminum	Brass	Steel	Stainless Steel
#4-40	8	15	15	15
#6-32	12	24	24	30
#8-32	16	40	38	45
#10-32	25	45	45	60
1/4-20	60	130	130	160
5/16-18	100	156	156	260
3/8-16	190	345	344	400
1/2-13	350	—	660	—

Thread Size	Application Torque (N•m) (1)			
	Fastener Material			
	Aluminum	Brass	Steel	Stainless Steel
M3	0.9	1.7	1.7	1.7
M4	1.8	4.5	4.3	5.1
M5	2.8	5.1	5.1	6.8
M6	6.8	14.7	14.7	18.1
M8	11.3	17.6	17.6	29.4
M10	21.5	39	38.9	45.2
M12	39.6	—	74.6	—

(1) These values are averages only.

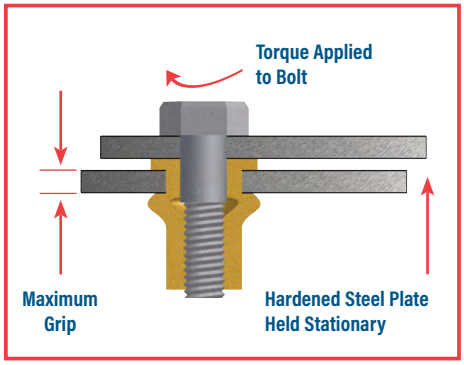

Torque Strength

UPSET LOAD (lbs.) / (kN)

Thread Size	Aluminum		Brass		Steel		Stainless Steel	
	Min. Grip	Max. Grip	Min. Grip	Max. Grip	Min. Grip	Max. Grip	Min. Grip	Max. Grip
#4-40	400	450	700	800	700	800	800	900
#6-32	500	600	800	950	850	1000	1000	1300
#8-32	600	700	1300	1500	1000	1250	1400	1650
#10-32	750	800	1600	1800	1300	1500	1900	2000
1/4-20	1300	1450	2570	2880	2300	2610	3300	3400
5/16-18	1900	2150	3870	4210	3300	3650	4800	5600
3/8-16	2570	2700	4620	4940	4965	5325	6100	6660
1/2-13	4000	4400	—	—	6700	7200	—	—

Thread Size	Aluminum		Brass		Steel		Stainless Steel	
	Min. Grip	Max. Grip	Min. Grip	Max. Grip	Min. Grip	Max. Grip	Min. Grip	Max. Grip
M3	1.8	2	3.1	3.6	3.1	3.6	3.6	4
M4	2.7	3.1	5.8	6.7	4.4	5.6	6.2	7.3
M5	3.3	3.6	7.1	8	5.8	6.7	8.4	8.9
M6	5.8	6.4	11.4	12.8	10.2	11.6	14.7	15.1
M8	8.4	9.6	17.2	18.7	14.7	16.2	21.3	24.9
M10	11.4	12	20.5	22	22.1	23.7	27.1	29.6
M12	17.8	19.6	—	—	29.8	32	—	—

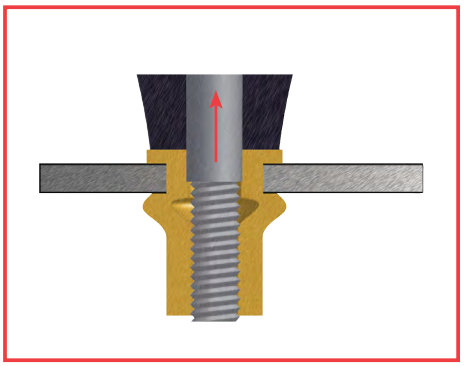

Aluminum fasteners tested in aluminum plates. Steel and brass fasteners tested in steel plates. Stainless steel fasteners tested in stainless steel plates. These values are averages only and based on controlled tests - certain variations must be expected in actual practice. Performance testing of this product in your application is recommended. We will be happy to provide samples for this purpose.

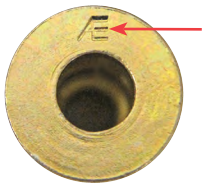

Look for the "AE" on ATLAS® Plus+Tite® and MaxTite® inserts.

MaxTite® MATERIAL & FINISH SPECIFICATIONS

Round Body				
Code	**Material**	**Threads (1)**	**Standard Finish**	**Raw Material Min. Tensile Strength (PSI Ultimate) - Reference Only**
A	6053 Aluminum or 6061 Aluminum	Unified, 3B per ASME B1.1 Metric, 6H per ASME B1.13M	Anodized in accordance with MIL-PRF-8625, Type II, Class 1 plus lubricant	25,000
S	Low Carbon Steel	Unified, 3B per ASME B1.1 Metric, 6H per ASME B1.13M	Cadmium Plate - .0003" minimum thickness per SAE AMS-QQ-P-416 Class 2, Type II	42,000
CH	4037 Alloy Steel (2)	Unified, 3B per ASME B1.1 Metric, 6H per ASME B1.13M	Cadmium Plate - .0003" minimum thickness per SAE AMS-QQ-P-416 Class 2, Type II	55,000 (No. 4 & No. 6 Thread Size) 85,000 (No. 8 to 1/2" Thread Sizes)
SS	430 Stainless Steel	Unified, 3B per ASME B1.1 Metric, 6H per ASME B1.13M	Passivated and/or tested per ASTM A380 plus lubricant	67,000
NM	300 Series Stainless Steel		Passivated and/or tested per ASTM A380 plus lubricant	80,000
BR	Alloy No. 260 Brass (2)	Unified, 3B per ASME B1.1 Metric, 6H per ASME B1.13M	None - bright as machined	50,000

NOTE: *AESS and AENM parts ordered per specifications NAS1329 or NAS1330 will be pickled and passivated per AMS2700.*

(1) Closed end MaxTite and closed end NAS parts in all unified thread sizes, have thread length greater than 1.5 times nominal diameter, therefore the minor diameter tolerance is expanded to 125% of class 3B standard tolerance per ASME B1.1 section 5.6.1. Thread acceptability per gaging system 21 prior to installation.

(2) Not all sizes available in this material. Contact us at atlas@pemnet.com.

MaxTite® COUNTERSUNK HOLE PREPARATION

MACHINING METHOD

To obtain a precision hole and countersink, follow these steps:

STEP 1 Drill an undersized hole in the sheet. Refer to pages 28 and 29 for hole sizes.

STEP 2 Countersink the hole using a 100 +/-1 degree countersink tool. Adjust the hole depth to allow for the fastener to be flush to .005" proud.

STEP 3 Drill the finished hole in the sheet that meets the "Install Hole Size" dimensions shown on pages 28 and 29.

STEP 4 If keyed fastener is to be used, cut a keyway to the "Keyway Dimensions" shown on pages 28 and 29.

STEP 5 Install fastener using spin-pull or pull-to-pressure tools.

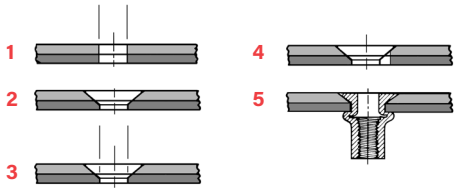

DIMPLING METHOD

Sheets thinner than a fastener head thickness require a dimple countersink installation.

The ideal bulge on any fastener installation will always be formed against a flat under-surface. The bell-mouth that results from ordinary dimpling will not permit the fastener to form a proper bulge and these fasteners will form a weak bulge, a spread shank, and may possibly shear.

A ledge at the bottom of the dimpling die must be used to provide a flat surface in the dimpling operation. The "flat" on the dimple will save costly deburring before dimpling and enables the fastener to form normally, providing maximum strength.

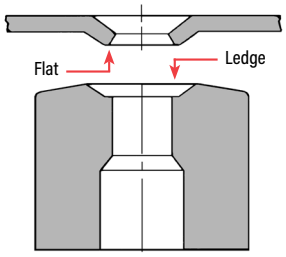

MaxTite® INSTALLATION

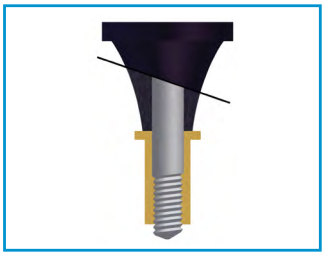

STEP 1 The fastener is threaded onto the pull-up stud of an installation tool.

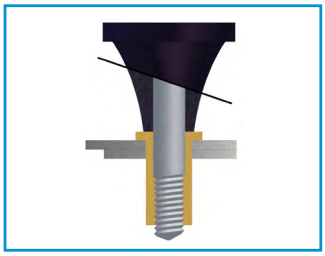

STEP 2 The fastener, on the pull-up stud, is inserted into the drilled or punched hole.

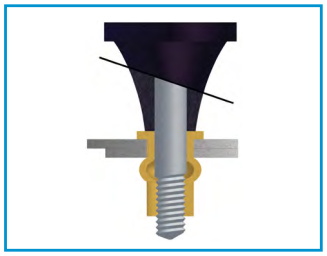

STEP 3 The pull-up stud retracts and bulges the unthreaded portion of the fastener shank against the flat undersurface.

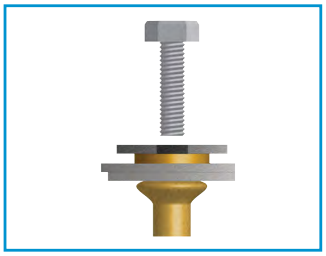

STEP 4 The installation tool stud is removed, leaving the fastener secure and ready for the attachment screw.

NOTE: For open end fasteners, the pull-up stud tip protrudes beyond the end of the MaxTite fastener. On closed end fasteners, screw the pull-up stud into the fastener minimum of seven turns. Be sure the anvil rests on the fastener head.

STANDARD FULL-HEX

- **Designed for high load applications.**
- **Full hex feature for high torque applications.**

For recommended installation tool, see tool selector guide on page 50.

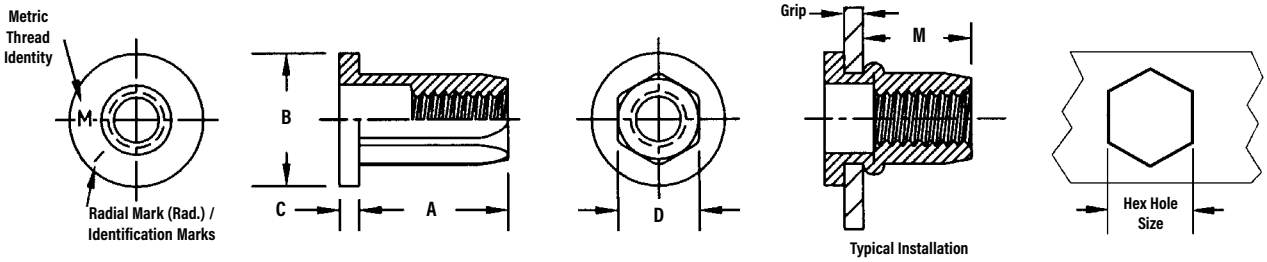

All dimensions are in inches. *See page 54 for part number key.*

Thread Size (1)	Part Number (2)	Grip Range (1)	Identification Mark	A ±.015	B ±.015	C Nom.	D Max.	M Ref.	Hex Hole Size In Sheet +.005 -.000	Weight lbs./1000
#10-32	AES10H85ZYR	.010 - .085	Blank	.344	.344	.043	.223	.200	.224	2.4
#10-32	AES10H135ZYR	.085 - .135	1 Rad.	.406	.344	.043	.223	.210	.224	2.64
#10-32	AES10H185ZYR	.135 - .185	2 Rad.	.453	.344	.043	.223	.210	.224	2.78
1/4-20	AES25H85ZYR	.020 - .085	Blank	.406	.437	.043	.296	.245	.297	4.71
1/4-20	AES25H145ZYR	.085 - .145	1 Rad.	.469	.437	.043	.296	.250	.297	5.11
1/4-20	AES25H205ZYR	.145 - .205	2 Rad.	.531	.437	.043	.296	.250	.297	5.5
5/16-18	AES31H105ZYR	.030 - .105	Blank	.562	.562	.048	.368	.375	.369	9.66
5/16-18	AES31H175ZYR	.105 - .175	1 Rad.	.640	.562	.048	.368	.380	.369	10.42
5/16-18	AES31H245ZYR	.175 - .245	2 rad.	.703	.562	.048	.368	.375	.369	11
3/8-16	AES37H115ZYR	.030 - .115	Blank	.625	.656	.058	.437	.400	.438	13.85
3/8-16	AES37H205ZYR	.115 - .205	1 Rad.	.718	.656	.058	.437	.405	.438	15
3/8-16	AES37H295ZYR	.205 - .295	2 Rad.	.812	.656	.058	.437	.410	.438	16.11

All dimensions are in millimeters.

Thread Size (1)	Part Number (2)	Grip Range (1)	Identification Mark	A ±0.38	B ±0.38	C Nom.	D Max.	M Ref.	Hex Hole Size In Sheet +0.13	Weight kg/1000
M5 x 0.8	AESM5H215ZYR	0.5 - 2.15	Blank	10.3	9.52	1.09	6.35	6.72	6.36	1.54
M5 x 0.8	AESM5H355ZYR	2.15 - 3.55	1 Rad.	11.9	9.52	1.09	6.35	6.72	6.36	1.66
M5 x 0.8	AESM5H505ZYR	3.55 - 5.05	2 Rad.	13.48	9.52	1.09	6.35	6.72	6.36	1.72
M6 x 1	AESM6H215ZYR	0.5 - 2.15	Blank	10.3	11.09	1.09	7.52	6.22	7.54	2.14
M6 x 1	AESM6H365ZYR	2.15 - 3.65	1 Rad.	11.9	11.09	1.09	7.52	6.22	7.54	2.47
M6 x 1	AESM6H520ZYR	3.65 - 5.2	2 Rad.	13.48	11.09	1.09	7.52	6.22	7.54	2.64
M8 x 1.25	AESM8H255ZYR	0.5 - 2.55	Blank	15.86	15.07	1.57	10.08	10.35	10.11	6.28
M8 x 1.25	AESM8H455ZYR	2.5 - 4.55	1 Rad.	17.84	15.07	1.57	10.08	10.35	10.11	6.79
M8 x 1.25	AESM8H660ZYR	4.55 - 6.6	2 Rad.	19.82	15.07	1.57	10.08	10.35	10.11	7.23
M10 x 1.5	AESM10H295ZYR	0.75 - 2.95	Blank	15.88	17.48	1.57	11.89	13.08	11.91	7.58
M10 x 1.5	AESM10H520ZYR	2.95 - 5.2	1 Rad.	18.24	17.48	1.57	11.89	13.08	11.91	8.22
M10 x 1.5	AESM10H750ZYR	5.2 - 7.5	2 Rad.	20.62	17.48	1.57	11.89	13.08	11.91	8.86

(1) Additional thread sizes and grip ranges are available.
(2) Other materials available. See page 54 for details. Cadmium finish available upon request.

MATERIAL & FINISH SPECIFICATIONS

Type	Material	Threads	Standard Finish	Min. Tensile Strength (PSI Ult.)
AES	Low Carbon Steel	Unified, 3B per ASME B1.1 Metric, 6H per ASME B1.13M	RoHS Compliant Zinc Yellow	45,000

Note: *See page 54 for part number key.*

ATLAS® SERIES 800 AND 900 SPIN-SPIN TOOLS

- Totally pneumatic tool that installs ATLAS SpinTite® and pre-bulbed Plus+Tite® fasteners into various material thickness.

Series 800 tools

Also available Series 806 tool with adjustable clutch to install #4-40 to 1/4-20 thread sizes.

901 902, 903 and 904 In-line tools

911, 912 and 913 Right angle tools

	Thread Size	Complete Tool Part No. Series 800	Complete Tool Part No. 901, 902 903 & 904	(1) Tool RPM	Air Settings – Fastener Material – Steel & Brass: Dynamic Air Pressure Settings	Air Settings – Fastener Material – Aluminum: Dynamic Air Pressure Settings	Air Settings – Fastener Material – MONEL®: Dynamic Air Pressure Settings	Nose Assembly Components For Internally Threaded Nuts: Part No. For Complete Nose Assembly	Nose Assembly Components For Internally Threaded Nuts: Mandrel Socket Head Cap Screw	Nose Assembly Components For Internally Threaded Nuts: Bearing Set (P/N)	Stud Series Part No. For Nose Assembly
PSI	#4-40	AE801-440	AE901-440	3000	35 - 45	30 - 40	35 - 45	AENP-440	440 x 1.50"	AEPB-4	AESNP-440
PSI	#6-32	AE801-632	AE901-632	3000	70 - 80	60 - 80	70 - 80	AENP-632	632 x 1.50"	AEPB-6	AESNP-632
PSI	#8-32	AE801-832	AE901-832	3000	70 - 90	50 - 70	70 - 90	AENP-832	832 x 1.50"	AEPB-8	AESNP-832
PSI	#10-24	AE802-1024	AE902-1024	1500	60 - 90	40 - 70	60 - 90	AENP-1024	1024 x 1.75"	AEPB-10	AESNP-1024
PSI	#10-32	AE802-1032	AE902-1032	1500	60 - 90	40 - 70	60 - 90	AENP-1032	1032 x 1.75"	AEPB-10	AESNP-1032
PSI	1/4-20	AE803-2520	AE903-2520	600	70 - 90	60 - 80	70 - 95	AENP-2520	420 x 1.50"	AEPB-25	AESNP-2520
PSI	1/4-28	AE803-2528	AE903-2528	600	70 - 90	60 - 80	70 - 95	AENP-2528	428 x 1.50"	AEPB-25	AESNP-2528
PSI	5/16-18	AE804-3118	AE904-3118	400	70 - 110	60 - 90	70 - 110	AENP-3118	518 x 2.00"	AEPB-31	AESNP-3118
PSI	5/16-24	AE804-3124	AE904-3124	400	70 - 110	60 - 90	70 - 110	AENP-3124	524 x 2.00"	AEPB-31	AESNP-3124
PSI	3/8-16	AE804-3716	AE904-3716	400	70 - 110	60 - 90	70 - 110	AENP-3716	616 x 2.00"	AEPB-37	AESNP-3716
PSI	3/8-24	AE804-3724	AE904-3724	400	70 - 110	60 - 90	70 - 110	AENP-3724	624 x 2.00"	AEPB-37	AESNP-3724
PSI	1/2-13	AE808-5013	—	275	75 - 120	60 - 90	75 - 110	AENP-5013	813 x 2.50"	AEPB-50	—
PSI	1/2-20	AE808-5020	—	275	75 - 120	60 - 90	75 - 110	AENP-5020	820 x 2.50"	AEPB-50	—
BARS	M3	AE801-M3	AE901-M3	3000	2.4 - 3.1	2.1 - 2.7	2.4 - 3.1	AENP-M3	M3 x 40mm	AEPB-M3	AESNP-M3
BARS	M4	AE801-M4	AE901-M4	3000	2.4 - 3.1	3.4 - 4.8	4.8 - 6.2	AENP-M4	M4 x 40mm	AEPB-M4	AESNP-M4
BARS	M5	AE802-M5	AE902-M5	1500	4.8 - 5.5	2.7 - 4.8	4.1 - 6.2	AENP-M5	M5 x 45mm	AEPB-M5	AESNP-M5
BARS	M6	AE803-M6	AE903-M6	600	4.1 - 5.5	4.1 - 5.5	4.8 - 6.5	AENP-M6	M6 x 40mm	AEPB-M6	AESNP-M6
BARS	M8	AE804-M8	AE904-M8	400	4.8 - 6.2	4.1 - 6.2	4.8 - 7.5	AENP-M8	M8 x 50mm	AEPB-M8	AESNP-M8
BARS	M10	AE804-M10	AE904-M10	400	4.1 - 7.5	4.1 - 6.2	4.8 - 7.5	AENP-M10	M10 x 50mm	AEPB-M10	AESNP-M10
BARS	M12	AE808-M12	—	275	4.1 - 7.5	4.1 - 6.2	5.1 - 7.5	AENP-M12	M12 x 60mm	AEPB-M12	—

(1) Also available - 900 RPM Series 805 tool.

	Thread Size	Complete Tool Part No. 911, 912 & 913	Tool RPM	Air Settings – Fastener Material – Steel & Brass: Dynamic Air Pressure Settings	Air Settings – Fastener Material – Aluminum: Dynamic Air Pressure Settings	Air Settings – Fastener Material – MONEL®: Dynamic Air Pressure Settings	Nose Assembly Components For Internally Threaded Nuts: Part No. For Complete Nose Assembly	Nose Assembly Components For Internally Threaded Nuts: Mandrel Socket Head Cap Screw	Nose Assembly Components For Internally Threaded Nuts: Bearing Set (P/N)	Stud Series Part No. For Nose Assembly
PSI	#4-40	AE911-440	2200	35 - 45	30 - 40	35 - 45	AENP-440	440 x 1.50"	AEPB-4	AESNP-440
PSI	#6-32	AE911-632	2200	60 - 80	40 - 70	60 - 80	AENP-632	632 x 1.50"	AEPB-6	AESNP-632
PSI	#8-32	AE911-832	2200	60 - 90	40 - 70	60 - 90	AENP-832	832 x 1.50"	AEPB-8	AESNP-832
PSI	#10-24	AE911-1024	2200	60 - 90	40 - 70	60 - 90	AENP-1024	1024 x 1.75"	AEPB-10	AESNP-1024
PSI	#10-32	AE911-1032	2200	60 - 90	40 - 70	60 - 90	AENP-1032	1032 x 1.75"	AEPB-10	AESNP-1032
PSI	1/4-20	AE912-2520	1100	60 - 90	50 - 80	70 - 95	AENP-2520	420 x 1.50"	AEPB-25	AESNP-2520
PSI	1/4-28	AE912-2528	1100	70 - 90	50 - 80	70 - 95	AENP-2528	428 x 1.50"	AEPB-25	AESNP-2528
PSI	5/16-18	AE913-3118	400	70 - 110	60 - 90	70 - 110	AENP-3118	518 x 2.00"	AEPB-31	AESNP-3118
PSI	5/16-24	AE913-3124	400	70 - 110	60 - 90	70 - 110	AENP-3124	524 x 2.00"	AEPB-31	AESNP-3124
PSI	3/8-16	AE913-3716	400	70 - 110	60 - 90	70 - 110	AENP-3716	616 x 2.00"	AEPB-37	AESNP-3716
PSI	3/8-24	AE913-3724	400	70 - 110	60 - 90	70 - 110	AENP-3724	624 x 2.00"	AEPB-37	AESNP-3724
BARS	M3	AE911-M3	2200	2.4 - 3.1	2.1 - 2.7	2.4 - 3.1	AENP-M3	M3 x 40mm	AEPB-M3	AESNP-M3
BARS	M4	AE911-M4	2200	2.4 - 3.1	2.7 - 4.8	4.1 - 6.2	AENP-M4	M4 x 40mm	AEPB-M4	AESNP-M4
BARS	M5	AE911-M5	2200	4.1 - 5.5	2.7 - 4.8	4.1 - 6.2	AENP-M5	M5 x 45mm	AEPB-M5	AESNP-M5
BARS	M6	AE912-M6	1100	4.1 - 5.5	4.1 - 5.5	4.8 - 7.5	AENP-M6	M6 x 40mm	AEPB-M6	AESNP-M6
BARS	M8	AE913-M8	400	4.8 - 6.2	4.1 - 6.2	4.8 - 7.5	AENP-M8	M8 x 50mm	AEPB-M8	AESNP-M8
BARS	M10	AE913-M10	400	4.1 - 7.5	4.1 - 6.2	4.8 - 7.5	AENP-M10	M10 x 50mm	AEPB-M10	AESNP-M10

NOTE: *The air supplied to the 800 and 900 series tools should be dry and free of contamination to prevent premature wear and tear of the internal components. We suggest use of a filter, pressure regulator, and oiler system to be located in close proximity to the tool. All available thread sizes may not be listed. Contact us for availability. Optional mandrel lengths are also available for all product families.* ***The air settings reported are suggested guidelines. Adjustments may be necessary for your application.***

ATLAS® RIV938P
PULL-TO-PRESSURE TOOL

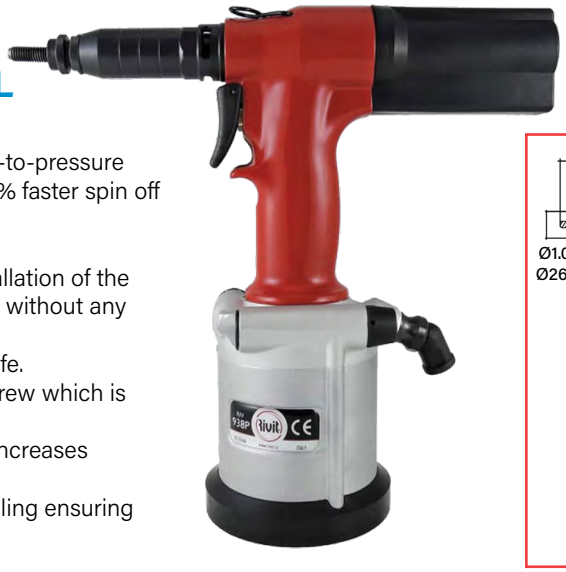

NEW!
Faster spinning on and off

The newly redesigned ATLAS® RIV938P pull-to-pressure tool has a 13% faster spin on speed and a 29% faster spin off speed than the previous tool.

- Pressure controlled setting allows the installation of the same insert into various material thickness without any adjustment of the tool.
- Pull-to-pressure feature extends mandrel life.
- Mandrel is a hardened socket head cap screw which is easy to replace when necessary.
- The auto-reverse feature after installation increases production rate.
- Eliminates over installing and double installing ensuring fastener thread integrity.
- Installs ATLAS stud series.

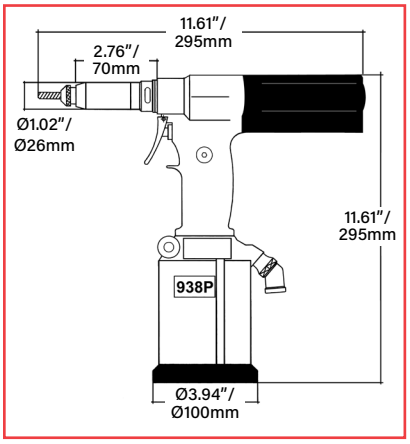

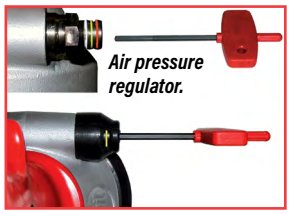

RIV938P (4439600 tool only) - nose pieces sold separately.

RIV938P-UN (unified kit) - includes a gun and tooling to install thread sizes #6-32, #8-32, #10-32, 1/4-20, 5/16-18, and 3/8-16.

RIV938P-MT (metric kit) - includes a gun and tooling to install thread sizes M4 through M10.

Tool Specifications

	Thread Sizes	Weight (1)	Air (2)	Air Use	Tool Speed	Minimum Hose Size I.D.	Max. Axial Pulling Load	Max. Stroke
UNIFIED	#4 to 3/8" (female threaded inserts) #8 to 5/16" (male threaded inserts)	4.6 lbs.	90 PSI	305 cu. in.	2250 rpm @ 90 PSI	3/8"	4271 lbs. @ 90 PSI	.256"
METRIC	M3 to M10 (female threaded inserts) M4 to M8 (male threaded inserts)	2.1 kg.	6 BAR	5 liters	2250 rpm @ 6 BAR	9.5 mm	19 kN @ 6 BAR	6.5 mm

(1) With nose piece.
(2) Dynamic air pressure for unified tool is 70 to 100 PSI and 5 to 7 BAR for the metric tool. Do not exceed these values or tool can be damaged. The use of a pressure regulator is recommended. See preset in-line pressure regulator on page 49.

UNIFIED NOSE ASSEMBLY PART NUMBERS

Thread Size	Part No. For Complete Insert Nose Assembly	Part No. For Complete Stud Nose Assembly	Mandrel Socket Head Cap Screw
#4-40	4326700	—	4-40 x 1.25"
#6-32	3755100	—	6-32 x 1.5"
#8-32	3755500	4361900	8-32 x 1.5"
#10-24	3755900 (3)	4555100	10-24 x 2.25"
#10-32	3755900	4362000	10-32 x 2.25"
1/4-20	3756100	4362100	1/4-20 x 2.25"
1/4-28	3756100 (3)	—	1/4-28 x 2.25"
5/16-18	3756300	4362200	5/16-18 x 2.25"
5/16-24	3756300 (3)	—	5/16-24 x 2.25"
3/8-16	3756700	—	3/8-16 x 2.5"
3/8-24	—	—	3/8-24 x 2.5"

(3) Use this nose assembly with properly sized socket head cap screw.

METRIC NOSE ASSEMBLY PART NUMBERS

Thread Size	Part No. For Complete Insert Nose Assembly	Part No. For Complete Stud Nose Assembly	Mandrel Socket Head Cap Screw
M3	3441100	—	M3 x 35
M4	3441200	3442300	M4 x 50
M5	3441300	3442400	M5 x 55
M6	3441400	3442500	M6 x 55
M8	3441500	3442600	M8 x 60
M10	3441600	4601900	M10 x 65

Available on request

Anti-scratch wing protection
Part Number 4217600.

Security cap for air pressure regulator
Part Number FE-TS-938-SC-S

ATLAS® RIV939P
POWERFUL PULL-TO-PRESSURE TOOL FOR RIVET NUTS UP TO M12

NEW!
Faster spinning on and off

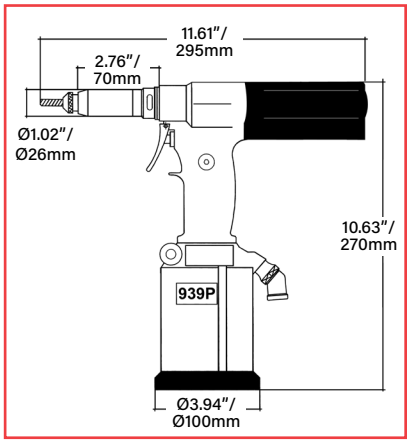

The newly redesigned ATLAS® RIV939P pull-to-pressure tool has a 13% faster spin on speed and a 29% faster spin off speed than the previous tool.

- Pressure controlled setting allows the installation of the same insert into various material thickness without any adjustment of the tool.
- Pull-to-pressure feature extends mandrel life.
- Mandrel is a hardened socket head cap screw which is easy to replace when necessary.
- The auto-reverse feature after installation increases production rate.
- Eliminates over installing and double installing ensuring fastener thread integrity.
- Installs ATLAS stud series.

Air pressure regulator.

RIV939P (4843900 tool only) - nose pieces sold separately.

RIV939P-UN (unified kit) - includes a gun and tooling to install thread sizes #6-32, #8-32, #10-32, 1/4-20, 5/16-18 and 3/8-16.

RIV939P-MT (metric kit) - includes a gun and tooling to install thread sizes M4 through M10.

Tool Specifications

	Thread Sizes	Weight (1)	Air (2)	Air Use	Tool Speed	Minimum Hose Size I.D.	Max. Axial Pulling Load	Max. Stroke
UNIFIED	#4 to 3/8" (female threaded inserts) #8 to 5/16" (male threaded inserts)	4.85 lbs.	90 PSI	305 cu. in.	2250 rpm @ 95 PSI	3/8"	5980 lbs. @ 90 PSI	.256"
METRIC	M3 to M10 (female threaded inserts) M4 to M8 (male threaded inserts)	2.2 kg.	6 BAR	5 liters	2250 rpm @ 6.5 BAR	9.5 mm	26.6 kN @ 6 BAR	6.5 mm

(1) Without nose piece.
(2) Dynamic air pressure for unified tool is 70 to 100 PSI and 5 to 7 BAR for the metric tool. Do not exceed these values or tool can be damaged. The use of a pressure regulator is recommended. See preset in-line pressure regulator on page 49.

UNIFIED NOSE ASSEMBLY PART NUMBERS

Thread Size	Part No. For Complete Insert Nose Assembly	Part No. For Complete Stud Nose Assembly	Mandrel Socket Head Cap Screw
#4-40	4326700	—	4-40 x 1.25"
#6-32	3755100	—	6-32 x 1.5"
#8-32	3755500	4361900	8-32 x 1.5"
#10-24	3755900 (3)	4555100	10-24 x 2.25"
#10-32	3755900	4362000	10-32 x 2.25"
1/4-20	3756100	4362100	1/4-20 x 2.25"
1/4-28	3756100 (3)	—	1/4-28 x 2.25"
5/16-18	3756300	4362200	5/16-18 x 2.25"
5/16-24	3756300 (3)	—	5/16-24 x 2.25"
3/8-16	3756700	4772500	3/8-16 x 2.5"
3/8-24	—	—	3/8-24 x 2.5"

(3) Use this nose assembly with properly sized socket head cap screw.

METRIC NOSE ASSEMBLY PART NUMBERS

Thread Size	Part No. For Complete Insert Nose Assembly	Part No. For Complete Stud Nose Assembly	Mandrel Socket Head Cap Screw
M3	3441100	—	M3 x 35
M4	3441200	3442300	M4 x 50
M5	3441300	3442400	M5 x 55
M6	3441400	3442500	M6 x 55
M8	3441500	3442600	M8 x 60
M10	3441600	4601900	M10 x 65
M12	3441700	—	M12 x 65

Available on request

Anti-scratch wing protection
Part Number 4217600.

Security cap for air pressure regulator
Part Number FE-TS-938-SC-S

ATLAS® RIV938S
SMALL, LIGHTWEIGHT PULL-TO-PRESSURE TOOL

The pressure controlled installation of the ATLAS® RIV938S pull-to-pressure tool assures consistent installations and improves mandrel life.

- Pressure controlled setting allows the installation of the same insert into various material thickness without any adjustment of the tool.
- Pull-to-pressure feature extends mandrel life.
- Mandrel is a hardened socket head cap screw which is easy to replace when necessary.
- The auto-reverse feature after installation increases production rate.
- Eliminates over installing and double installing ensuring fastener thread integrity.

RIV938S (4143500 tool only) - nose pieces sold separately.

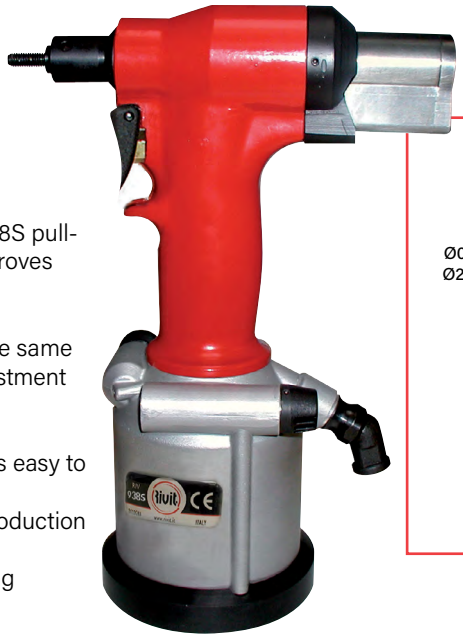

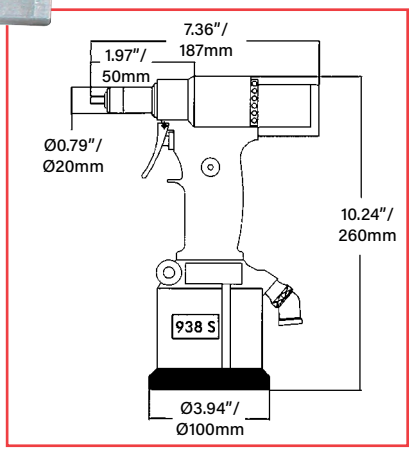

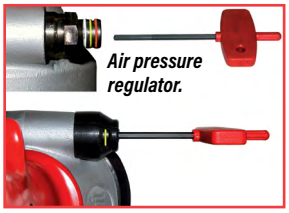

Tool Specifications								
	Thread Sizes	Weight (1)	Air (2)	Air Use	Minimum Hose Size I.D.	Max. Axial Pulling Load	Max. Stroke
UNIFIED	#6 to 1/4" (female threaded inserts)	3.7 lbs.	90 PSI	305.1 cu. in.	3/8"	3147 lbs. @ 90 PSI	.256"
METRIC	M3 to M6 (female threaded inserts)	1.7 kg.	6 BAR	5 liters	9.5 mm	14 kN @ 6 BAR	6.5 mm

(1) With nose piece.
(2) Dynamic air pressure for unified tool is 70 to 100 PSI and 5 to 7 BAR for the metric tool. Do not exceed these values or tool can be damaged. The use of a pressure regulator is recommended. See preset in-line pressure regulator on page 49.

UNIFIED NOSE ASSEMBLY PART NUMBERS

Thread Size	Part No. For Complete Insert Nose Assembly	Mandrel Socket Head Cap Screw
#4-40	4362400	4-40 x 1.25"
#6-32	4362500	6-32 x 1.5"
#8-32	4362600	8-32 x 1.5"
#10-24	4362700 (3)	10-24 x 2.25"
#10-32	4362700	10-32 x 2.25"
1/4-20	4362800	1/4-20 x 2.25"
1/4-28	4362800 (3)	1/4-28 x 2.25"

(3) Use this nose assembly with properly sized socket head cap screw.

METRIC NOSE ASSEMBLY PART NUMBERS

Thread Size	Part No. For Complete Insert Nose Assembly	Mandrel Socket Head Cap Screw
M3	3758400	M3 x 35
M4	3758500	M4 x 50
M5	3758600	M5 x 55
M6	3758700	M6 x 55

Available on request

Anti-scratch wing protection
Part Number 4217600.

Security cap for air pressure regulator
Part Number FE-TS-938-SC-S

ATLAS® RIV912 PULL-TO-STROKE SPIN-PULL TOOL

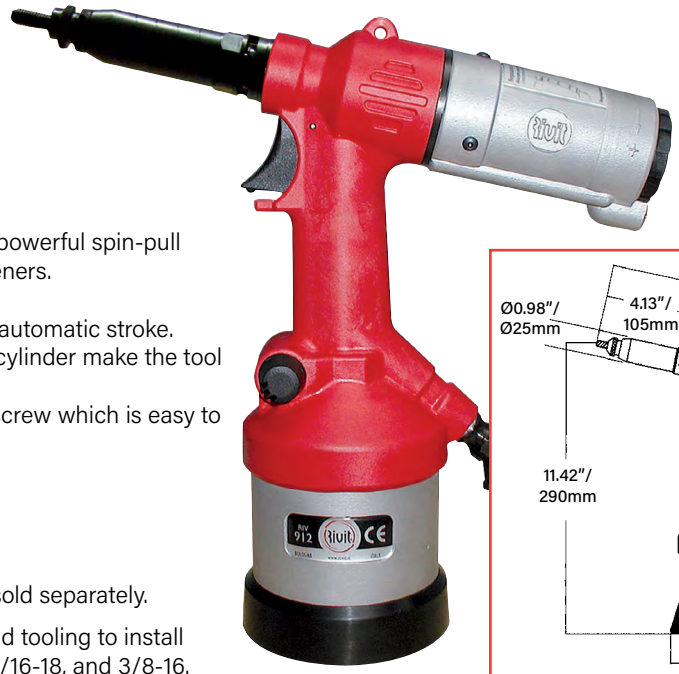

Installs ATLAS stud series

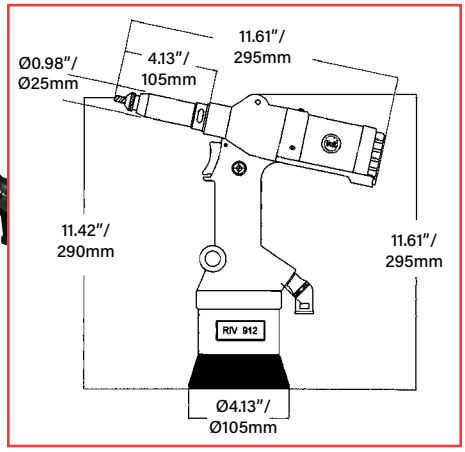

The ATLAS® RIV912 spin-pull tool provides powerful spin-pull action to easily install ATLAS MaxTite® fasteners.

- One-position trigger mechanism to start automatic stroke.
- Plastic casing and aluminum piston and cylinder make the tool lighter and easier to use.
- Mandrel is a hardened socket head cap screw which is easy to replace when necessary.

RIV912 (3440900 tool only) - nose pieces sold separately.

RIV912-UN (unified kit) - includes a gun and tooling to install thread sizes #6-32, #8-32, #10-32, 1/4-20, 5/16-18, and 3/8-16.

RIV912-MT (metric kit) - includes a gun and tooling to install thread sizes M4 through M12.

Tool Specifications

	Thread Sizes	Weight (1)	Air (2)	Air Use	Minimum Hose Size I.D.	Max. Axial Pulling Load	Max. Stroke
UNIFIED	#4 to 1/2" (female threaded inserts) #8 to 5/16" (male threaded inserts)	5 lbs.	90 PSI	457.5 cu. in.	3/8"	4721 lbs. @ 90 PSI	.256"
METRIC	M3 to M12 (female threaded inserts) M4 to M8 (male threaded inserts)	2.3 kg.	6 BAR	7.5 liters	9.5 mm	21 kN @ 6 BAR	6.5 mm

(1) With nose piece.
(2) Dynamic air pressure for unified tool is 70 to 100 PSI and 5 to 7 BAR for the metric tool. Do not exceed these values or tool can be damaged. The use of a pressure regulator is recommended. See preset in-line pressure regulator on page 49.

UNIFIED NOSE ASSEMBLY PART NUMBERS

Thread Size	Part No. For Complete Insert Nose Assembly	Part No. For Complete Stud Nose Assembly	Mandrel Socket Head Cap Screw
#4-40	4326700	—	4-40 x 1.25"
#6-32	3755100	—	6-32 x 1.5"
#8-32	3755500	4361900	8-32 x 1.5"
#10-24	3755900 (3)	4555100	10-24 x 2.25"
#10-32	3755900	4362000	10-32 x 2.25"
1/4-20	3756100	4362100	1/4-20 x 2.25"
1/4-28	3756100 (3)	—	1/4-28 x 2.25"
5/16-18	3756300	4362200	5/16-18 x 2.25"
5/16-24	3756300 (3)	—	5/16-24 x 2.25"
3/8-16	3756700	—	3/8-16 x 2.5"
3/8-24	—	—	3/8-24 x 2.5"
1/2-13	4361600	—	1/2-13 x 2.5"

(3) Use this nose assembly with properly sized socket head cap screw.

METRIC NOSE ASSEMBLY PART NUMBERS

Thread Size	Part No. For Complete Insert Nose Assembly	Part No. For Complete Stud Nose Assembly	Mandrel Socket Head Cap Screw
M3	3441100	—	M3 x 35
M4	3441200	3442300	M4 x 50
M5	3441300	3442400	M5 x 55
M6	3441400	3442500	M6 x 55
M8	3441500	3442600	M8 x 60
M10	3441600	4601900	M10 x 65
M12	3441700	—	M12 x 65

Available on request:
Extended sleeve part no. 3446600
Internal extension part no. 3446900

ATLAS® RIV942 PULL-TO-PRESSURE OR STROKE TOOL

Installs ATLAS stud series

The ATLAS ® RIV942 spin-pull tool can easily install ATLAS SpinTite® and MaxTite® fasteners.

The RIV942 tool has two different systems of regulation, pressure or stroke, for installing inserts. The hydropneumatic system and the mechanical components of this tool are much more reliable so the tool works better and lasts longer than most other tools.

- Mandrel is a hardened socket head cap screw which is easy to replace when necessary.

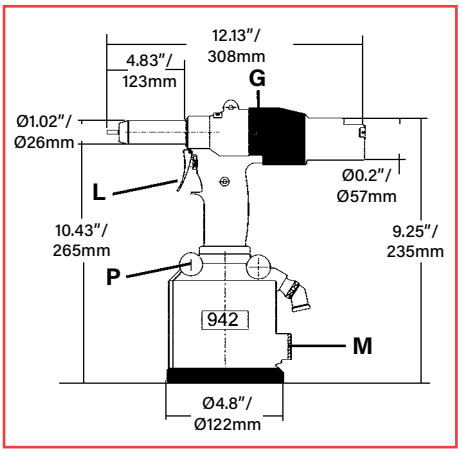

RIV942 (1701600 tool only) - nose pieces sold separately.

RIV942-UN (unified kit) - includes a gun and tooling to install thread sizes #6-32, #8-32, #10-32, 1/4-20, 5/16-18, and 3/8-16.

RIV942-MT (metric kit) - includes a gun and tooling to install thread sizes M4 through M12.

Manometer for pressure regulation

Regulation

1) Pressure regulation by rotating knob (**P**) while keeping the trigger (**L**) pushed. Pressure is displayed on manometer (**M**).
2) Adjust ring nut (**G**) for stroke regulation.

Tool Specifications

	Thread Sizes	Weight (1)	Air (2)	Air Use	Minimum Hose Size I.D.	Max. Axial Pulling Load	Max. Stroke
UNIFIED	#4 to 1/2" (female threaded inserts) #8 to 5/16" (male threaded inserts)	6.8 lbs.	90 PSI	457.5 cu. in.	3/8"	6969 lbs. @ 90 PSI	.394"
METRIC	M4 to M12 (female threaded inserts) M4 to M8 (male threaded inserts)	3.1 kg.	6 BAR	7.5 liters	9.5 mm	31 kN @ 6 BAR	10 mm

(1) With nose piece.
(2) Dynamic air pressure for unified tool is 70 to 100 PSI and 5 to 7 BAR for the metric tool. Do not exceed these values or tool can be damaged. The use of a pressure regulator is recommended. See preset in-line pressure regulator on page 49.

UNIFIED NOSE ASSEMBLY PART NUMBERS

Thread Size	Part No. For Complete Insert Nose Assembly	Part No. For Complete Stud Nose Assembly	Mandrel Socket Head Cap Screw
#6-32	3755100	—	6-32 x 1.5"
#8-32	3755500	4361900	8-32 x 1.5"
#10-24	3755900 (3)	4555100	10-24 x 2.25"
#10-32	3755900	4362000	10-32 x 2.25"
1/4-20	3756100	4362100	1/4-20 x 2.25"
1/4-28	3756100 (3)	—	1/4-28 x 2.25"
5/16-18	3756300	4362200	5/16-18 x 2.25"
5/16-24	3756300 (3)	—	5/16-24 x 2.25"
3/8-16	3756700	4772500	3/8-16 x 2.5"
3/8-24	—	—	3/8-24 x 2.5"
1/2-13	4466600 (4)	—	1/2-13 x 2.5"

METRIC NOSE ASSEMBLY PART NUMBERS

Thread Size	Part No. For Complete Insert Nose Assembly	Part No. For Complete Stud Nose Assembly	Mandrel Socket Head Cap Screw
M4	3441200	3442300	M4 x 50
M5	3441300	3442400	M5 x 55
M6	3441400	3442500	M6 x 55
M8	3441500	3442600	M8 x 60
M10	3441600	4601900	M10 x 65
M12	4259200	—	M12 x 65

(3) Use this nose assembly with properly sized socket head cap screw.

(4) Order part number 1701600-50 for tool complete with nose piece for installing 1/2-13 inserts.

ATLAS® RIV998V
PNEUMATIC PULL-TO-STROKE TOOL

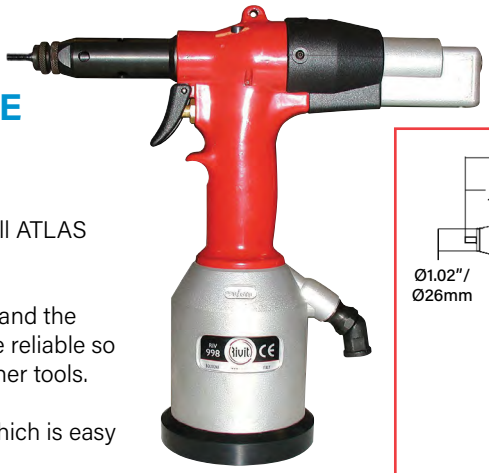

Installs ATLAS stud series

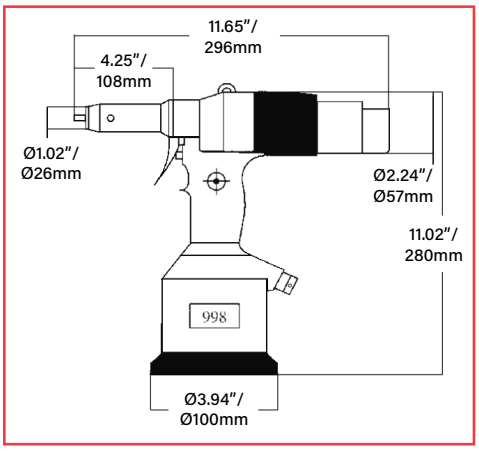

The ATLAS® RIV998V spin-pull tool can easily install ATLAS SpinTite® and MaxTite® fasteners.

The RIV998V tool has an hydro-pneumatic system and the mechanical components of this tool are much more reliable so the tool works better and lasts longer than most other tools.

- Mandrel is a hardened socket head cap screw which is easy to replace when necessary.

RIV998V (3767500 tool only) - nose pieces sold separately.

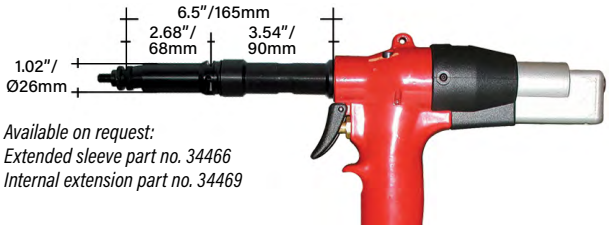

Available on request:
Extended sleeve part no. 34466
Internal extension part no. 34469

Tool Specifications

	Thread Sizes	Weight (1)	Air (2)	Air Use	Minimum Hose Size I.D.	Max. Axial Pulling Load	Max. Stroke
UNIFIED	#4 to 3/8" (female threaded inserts)	5.3 lbs.	90 PSI	457.5 cu. in.	3/8"	4271 lbs. @ 90 PSI	.256"
METRIC	M3 to M12 (female threaded inserts)	2.4 kg.	6 BAR	7.5 liters	9.5 mm	19 kN @ 6 BAR	6.5 mm

(1) With nose piece.
(2) Dynamic air pressure for unified tool is 70 to 100 PSI and 5 to 7 BAR for the metric tool. Do not exceed these values or tool can be damaged. The use of a pressure regulator is recommended. See preset in-line pressure regulator on page 49.

UNIFIED NOSE ASSEMBLY PART NUMBERS

Thread Size	Part No. For Complete Insert Nose Assembly	Part No. For Complete Stud Nose Assembly	Mandrel Socket Head Cap Screw
#4-40	4326700	—	4-40 x 1.25"
#6-32	3755100	—	6-32 x 1.5"
#8-32	3755500	4361900	8-32 x 1.5"
#10-24	3755900 (3)	4555100	10-24 x 2.25"
#10-32	3755900	4362000	10-32 x 2.25"
1/4-20	3756100	4362100	1/4-20 x 2.25"
1/4-28	3756100 (3)	—	1/4-28 x 2.25"
5/16-18	3756300	4362200	5/16-18 x 2.25"
5/16-24	3756300 (3)	—	5/16-24 x 2.25"
3/8-16	3756700	—	3/8-16 x 2.5"
3/8-24	—	—	3/8-24 x 2.5"

(3) Use this nose assembly with properly sized socket head cap screw.

METRIC NOSE ASSEMBLY PART NUMBERS

Thread Size	Part No. For Complete Insert Nose Assembly	Part No. For Complete Stud Nose Assembly	Mandrel Socket Head Cap Screw
M3	3441100	—	M3 x 35
M4	3441200	3442300	M4 x 50
M5	3441300	3442400	M5 x 55
M6	3441400	3442500	M6 x 55
M8	3441500	3442600	M8 x 60
M10	3441600	4601900	M10 x 65
M12	3441700	—	M12 x 65

ATLAS® RIV916
PULL-TO-STROKE TOOL FOR PLUS+TITE® INSERTS

The ATLAS® RIV916 tool is designed with a long stroke to easily install ATLAS straight shank and pre-bulbed Plus+Tite® fasteners.

- One-position trigger mechanism to start automatic stroke.
- Mandrel is a hardened socket head cap screw which is easy to replace when necessary.
- The auto-reverse feature after installation increases production rate.

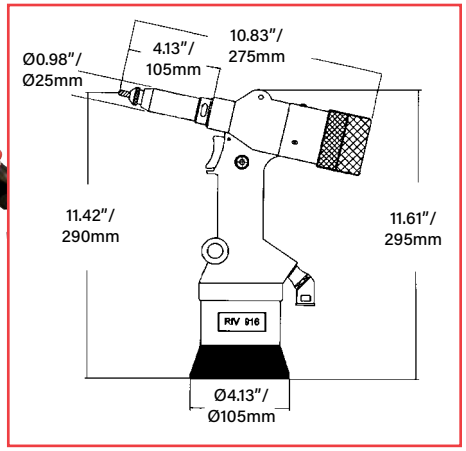

RIV916 (4154500 tool only) - nose pieces sold separately.

Tool Specifications								
	Thread Sizes	Weight (1)	Air (2)	Air Use	Minimum Hose Size I.D.	Max. Axial Pulling Load	Max. Stroke
UNIFIED	#10 to 3/8" (female threaded inserts)	5 lbs.	90 PSI	457.5 cu. in.	3/8"	2923 lbs. @ 90 PSI	.630"
METRIC	M4 to M10 (female threaded inserts)	2.3 kg.	6 BAR	7.5 liters	9.5 mm	13 kN @ 6 BAR	16 mm

(1) With nose piece.
(2) Dynamic air pressure for unified tool is 70 to 100 PSI and 5 to 7 BAR for the metric tool. Do not exceed these values or tool can be damaged. The use of a pressure regulator is recommended. See preset in-line pressure regulator on page 49.

UNIFIED NOSE ASSEMBLY PART NUMBERS

Thread Size	Part No. For Complete Insert Nose Assembly	Mandrel Socket Head Cap Screw
#10-24	4362900 (3)	10-24 x 2.25"
#10-32	4362900	10-32 x 2.25"
1/4-20	4363000	1/4-20 x 2.25"
1/4-28	4363000 (3)	1/4-28 x 2.25"
5/16-18	4363100	5/16-18 x 2.25"
5/16-24	4363100 (3)	5/16-24 x 2.25"
3/8-16	4363300	3/8-16 x 2.5"

(3) Use this nose assembly with properly sized socket head cap screw.

METRIC NOSE ASSEMBLY PART NUMBERS

Thread Size	Part No. For Complete Insert Nose Assembly	Mandrel Socket Head Cap Screw
M4	4186300	M4 x 50
M5	4186500	M5 x 55
M6	4186700	M6 x 55
M8	4186900	M8 x 60
M10	4187100	M10 x 65

ATLAS® RIV949
VERTICAL HYDROPNEUMATIC TOOL
Pull-to-pressure or stroke tool

One pull is enough to start the automatic stroke of the RIV949 tool. When hung on a balancer, this innovative tool makes vertical applications quicker and easier especially.

- Two systems of regulation for inserting inserts, pull-to-pressure or stroke.
- Installs blind threaded inserts M3 to M12 and blind threaded studs from M4 to M8.

RIV949 (4560800 tool only) - nose pieces sold separately.

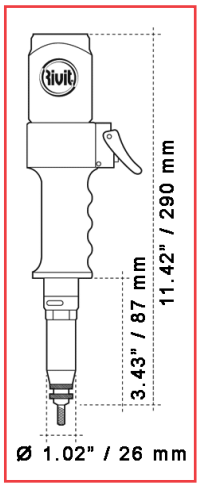

Tool Specifications

	Thread Sizes	Weight (without handle)	Total Weight (1)	Hose Length	Air (2)	Max. Axial Pulling Load	Max. Stroke	Box Dimensions	Vibrations
UNIFIED	#4 to 3/8" (inserts) #8 to 5/16" (studs)	4.41 lbs.	44.1 lbs.	8.2 Feet	90 PSI	4721 lbs. @ 90 PSI	.256"	19.7" x 11.8" x 9.3"	< 5.6 mi/(h.s)
METRIC	M3 to M12 (inserts) M4 to M10 (studs)	2 Kg.	20 kg.	2.5 meters	6 BAR	21 kN @ 6 BAR	6.5 mm	500 x 300 x 210 mm	< 2.5 m/s²

(1) With nose piece.
(2) Dynamic air pressure for unified tool is 70 to 100 PSI and 5 to 7 BAR for metric tool. Exceeding these values can damage tool. The use of a pressure regulator is recommended.

UNIFIED NOSE ASSEMBLY PART NUMBERS

Thread Size	Part No. For Complete Insert Nose Assembly	Part No. For Complete Stud Nose Assembly	Mandrel Socket Head Cap Screw
#4-40	4326700	—	4-40 x 1.25"
#6-32	3755100	—	6-32 x 1.5"
#8-32	3755500	4361900	8-32 x 1.5"
#10-24	3755900 (3)	4555100	10-24 x 2.25"
#10-32	3755900	4362000	10-32 x 2.25"
1/4-20	3756100	4362100	1/4-20 x 2.25"
1/4-28	3756100 (3)	—	1/4-28 x 2.25"
5/16-18	3756300	4362200	5/16-18 x 2.25"
5/16-24	3756300 (3)	—	5/16-24 x 2.25"
3/8-16	3756700	—	3/8-16 x 2.5"
3/8-24	3756700 (3)	—	3/8-24 x 2.5"

METRIC NOSE ASSEMBLY PART NUMBERS

Thread Size	Part No. For Complete Insert Nose Assembly	Part No. For Complete Stud Nose Assembly	Mandrel Socket Head Cap Screw
M3	3441100	—	M3 x 35
M4	3441200	3442300	M4 x 50
M5	3441300	3442400	M5 x 55
M6	3441400	3442500	M6 x 55
M8	3441500	3442600	M8 x 60
M10	3441600	4601900	M10 x 65
M12	3441700	—	M12 x 65

(3) Use this nose assembly with properly sized socket head cap screw.

Noise level: 76.0 dB (A)

FlexArm™ assembly arm solutions allows a higher level of consistent quality to be maintained. The following arms are available:

Part No.	Max. Motor Torque	Working Range	Max. Tool Weight
FAV-14	10 lbs.	19" to 37"	10 lbs.
FAV-18	10 lbs.	21" to 46"	10 lbs.
FAV-24	10 lbs.	30" to 57"	10 lbs.

Other arms available for unique requirements.
Contact us for more information.

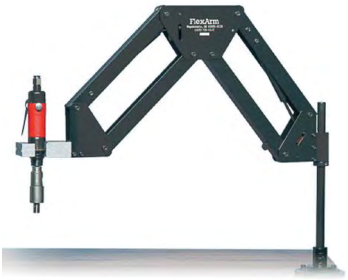

FlexArm™ Tapping & Assembly Arm Solutions

ATLAS® RIV916B
HEAVY-DUTY TOOL FOR LARGE THREAD SIZES

The ATLAS® RIV916B spin-pull tool provides powerful spin-pull action to easily install large thread size ATLAS inserts.

RIV916B (4194400 tool only) - nose pieces sold separately.

Tool Specifications

	Thread Sizes	Total Weight	Handle Weight (1)	Hose Length	Oil Pressure @ 6 BAR	Air (2)	Air Use	Minimum Hose Size I.D.	Max. Axial Pulling Load	Cylinder Stroke
UNIFIED	5/16" to 5/8" (female threaded inserts)	79.2 lbs.	5.9 lbs.	2.73 yards	4351 PSI	90 PSI	305.1 cu. in.	3/8"	18000 lbs. @ 100 PSI	.04 - .59"
METRIC	M8 and M16 (female threaded inserts)	36 kg.	2.7 kg.	2.5 meters	300 BAR	6 BAR	5 liters	9.5 mm	80 kN @ 6 BAR	1 - 15 mm

(1) With nose piece.
(2) Dynamic air pressure for unified tool is 70 to 100 PSI and 5 to 7 BAR for the metric tool. Do not exceed these values or tool can be damaged. The use of a pressure regulator is recommended. See preset in-line pressure regulator on page 49.

UNIFIED NOSE ASSEMBLY PART NUMBERS

Thread Size (3)	Part No. For Complete Insert Nose Assembly
5/8-11	4355400

METRIC NOSE ASSEMBLY PART NUMBERS

Thread Size(3)	Part No. For Complete Insert Nose Assembly	Part No. For Replacement Mandrel
M8	4228600	4227600
M10	4228800	4227900
M12	4228900	4228200
M14	4229000	4228500
M16	4208800	4209000

ATLAS® RIV938 AND RIV939 PROCESS MONITORING

With increasing quality and process requirements in today's manufacturing world, it's important to know that the work you're performing meets the customer's standards. The Atlas Process Monitoring tool will provide the assurance and peace of mind needed for repetitive and reliable installations of blind threaded inserts.

These units monitor the functions of our RIV938 and RIV939 tools providing immediate feedback at the point of installation. Having slight modifications, these proven tools will meet all the specifications found on pages 36 and 37 and use the standard nosepieces and mandrels.

Set up is simple, and once the unit learns your specific installation requirements, it will compare all subsequent installations to the parameters established. Instant feedback and defect detection is now right at your fingertips.

These systems are ready to go right out of the box, but can also be customized to deliver data to external devices including PLCs.

Part numbers for tool with control basic unit:
RIV938CB - 4640300 RIV939CB - 4814900

Control Basic shown with the RIV939CB Tool

FEATURES AND BENEFITS

- Monitor the operation of our standard RIV938 and RIV939 installation tools.
- An affordable process monitoring system, priced at a fraction of the competition.
- Visual and audible alarms for correct or incorrect installation.
- Piece counters and batch counters insure the proper number of parts are installed.
- Adjustments are easily made on the Electronic Module.
- Password protected intervention levels prevent unauthorized changes to tool settings.

Failed installations will shut down the tool, assuring the needed corrections are made prior to moving on.

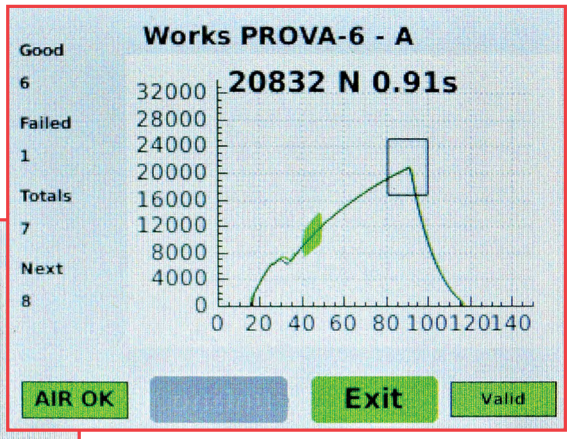

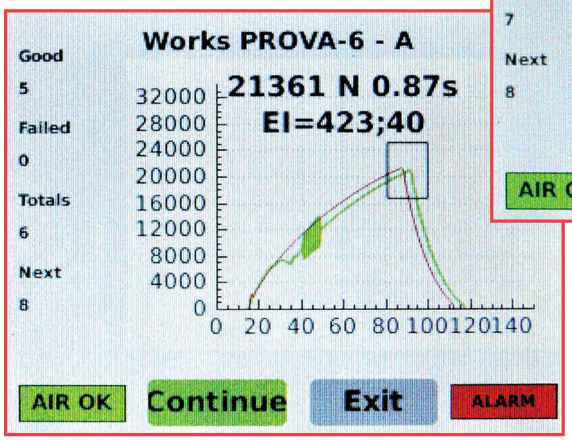

We also offer blind rivet tools with blind process monitoring capabilities. Call our Sales department for more information.

ATLAS® RIV990 and RIV991
HEXCUTTER TOOLS FOR HEXAGONAL HOLES

These tools are used to transform round holes to hexagonal holes.

Hole sizes are for the ATLAS® FM™ full metric inserts.

Nose pieces sold separately.

RIV991 (4630400 tool only)
Cuts hex hole sizes for #10-32 to 1/2" and M5 to M12

RIV990 (2986300 tool only)
Cuts hex hole sizes for #8 to 5/16" and M4 to M8

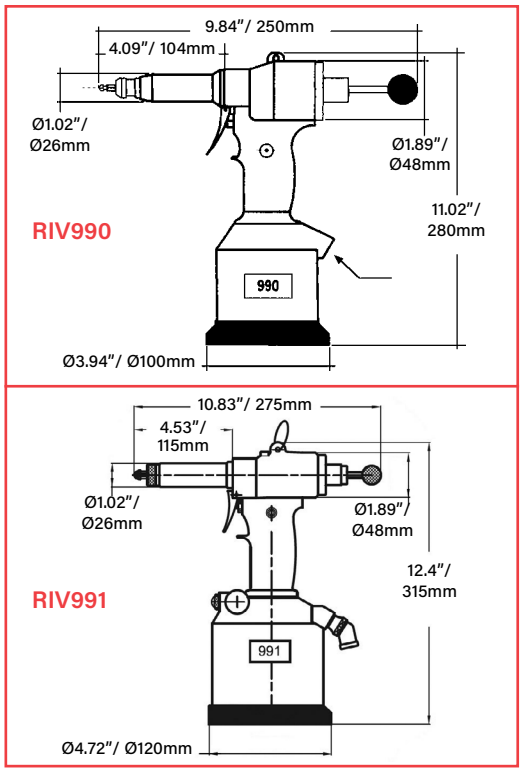

Tool Specifications											
RIV990						RIV991					
Weight (1)	Air (2)	Air Use	Min. Hose Size	Max. Axial Pulling Load I.D.	Max. Stroke	Weight (3)	Air (2)	Air Use	Min. Hose Size	Max. Axial Pulling Load I.D.	Max. Stroke
5.07 lbs.	90 PSI	152.6 cu. in.	3/8"	4271 lbs. @ 90 PSI	.236"	5.29 lbs.	90 PSI	152.6 cu in.	3/8"	4721 lbs. @ 90 PSI	.472"
2.3 kg.	6 BAR	2.5 liters	9.5 mm	19 kN @ 6 BAR	6 mm	2.4 kg.	6 BAR	2.5 liters	9.5 mm	21 kN @ 6 BAR	12 mm

(1) With nose piece.
(2) Dynamic air pressure for unified tool is 70 to 100 PSI and 5 to 7 BAR for the metric tool. Do not exceed these values or tool can be damaged. The use of a pressure regulator is recommended. See preset in-line pressure regulator on page 49.
(3) Without nose piece.

PUNCH AND DIE PART NUMBERS

Hexagonal Insert	Punch	Die	Tool
#8-32 / M4	4196900 (4)	—	RIV990
#10-32 / M5	2974900	2975300	RIV990 / RIV991
1/4-20 / M6	2925000	2925100	RIV990 / RIV991
5/16-18 / M8	2975000	2975400	RIV990 / RIV991
3/8-16 / M10	4631900 (4)	—	RIV991
1/2-13 / M12	4669200 (4)	—	RIV991

(4) Kit supplied with hexagonal punch and die.

Size	Pre-drilled * inches / mm ◯	Hexagon * inches / mm ⬡	Tool
#8-32 / M4	.246 / 6.25	.236 / 6	RIV990
#10-32 / M5	.285 / 7.25	.276 / 7	RIV990 / RIV991
1/4-20 / M6	.364 / 9.25	.354 / 9	RIV990 / RIV991
5/16-18 / M8	.443 / 11.25	.433 / 11	RIV990 / RIV991
3/8-16 / M10	.522 / 13.25	.512 / 13	RIV991
1/2-13 / M12	.640 / 16.25	.630 / 16	RIV991

**** Hole sizes are for the ATLAS® FM™ full metric inserts.***

PLATE THICKNESS - RIV990 TOOL

Size	Aluminium inches / mm	Steel inches / mm	Stainless Steel inches / mm
#8-32 / M4	.020-.098 / 0.5-2.5	.020-.059 / 0.5-1.5	.020-.059 / 0.5-1.5
#10-32 / M5	.020-.177 / 0.5-4.5	.020-.118 / 0.5-3.0	.020-.059 / 0.5-1.5
1/4-20 / M6	.020-.177 / 0.5-4.5	.020-.118 / 0.5-3.0	.020-.059 / 0.5-1.5
5/16-18 / M8	.020-.177 / 0.5-4.5	.020-.118 / 0.5-3.0	.020-.059 / 0.5-1.5

PLATE THICKNESS - RIV991 TOOL

Size	Aluminium inches / mm	Steel inches / mm	Stainless Steel inches / mm
#10-32 / M5	.020-.197 / 0.5-5.0	.020-.118 / 0.5-3.0	.020-.059 / 0.5-1.5
1/4-20 / M6	.020-.236 / 0.5-6.0	.020-.118 / 0.5-3.0	.020-.059 / 0.5-1.5
5/16-18 / M8	.020-.236 / 0.5-6.0	.020-.118 / 0.5-3.0	.020-.059 / 0.5-1.5
3/8-16 / M10	.020-.236 / 0.5-6.0	.020-.118 / 0.5-3.0	.020-.059 / 0.5-1.5
1/2-13 / M12	.020-.236 / 0.5-6.0	.020-.118 / 0.5-3.0	.020-.059 / 0.5-1.5

ATLAS® RIV901 HAND TOOL

RIV901CU - Part number 4516100 (weight: 2 lbs.). Unified kit in case installs #6-32, #8-32, #10-32, and 1/4-20.
RIV901CV - Part number 4560200 (weight: 910 grams). Metric kit in case installs M3, M4, M5 and M6.

UNIFIED NOSE PIECES

Thread Size	Mandrel Part No.	Anvil Part No.
#6-32	4516200	4517300
#8-32	4516300	4517400
#10-24	4518900	4517600
#10-32	4516500	4517600
1/4-20	4516400	4517500
1/4-28	4519000	4517500

METRIC NOSE PIECES

Thread Size	Mandrel Part No.	Anvil Part No.
M3	3706800	3707200
M4	3706900	3707300
M5	3707000	3707400
M6	3707100	3707500

Spare nose pieces sold separately.

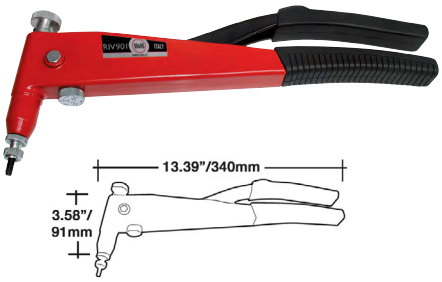

ATLAS® RIV903 HAND TOOL

RIV903CU - Part number 4516600 (weight: 4.85 lbs.). Unified kit in case installs #6-32, #8-32, #10-32, 1/4-20, 5/16-18 and 3/8-16.
RIV903C - Part number 3675800 (weight: 2200 grams). Metric kit in case installs M3, M4, M5, M6, M8 and M10.

UNIFIED NOSE PIECES

Thread Size	Mandrel Part No.	Anvil Part No.
#6-32	4516700	4517800
#8-32	4516800	4517900
#10-24	4519100	4518100
#10-32	4517000	4518100
1/4-20	4516900	4518000
1/4-20 (1)	4527800	4518000
1/4-28	4519200	4518000
5/16-18	4517100	4518200
5/16-18 (1)	4527900	4518200
5/16-24	4527600	4518200
3/8-16	4517200	4518300
3/8-16 (1)	4528000	4518300
3/8-24	4527700	4518300

METRIC NOSE PIECES

Thread Size	Mandrel Part No.	Anvil Part No.
M3	3707600	3708200
M4	3707700	3708300
M5	3707800	3708400
M6	3707900	3708500
M6 (1)	4193900	3708500
M8	3708000	3708600
M8 (1)	4194000	3708600
M10	3708100	3708700

(1) Longer screw for Plus+Tite nut installation.

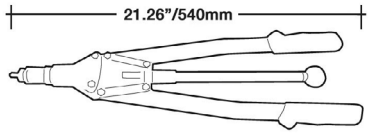

ATLAS® RIV905 HYDRAULIC HAND TOOL

- Simple to operate and easy to handle.
- Hydraulic force allows for installation of high-strength rivet nuts.

RIV905 (4318900 tool only) - nose pieces sold separately.

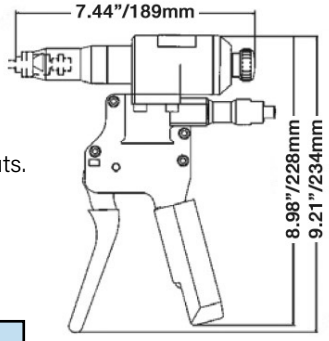

UNIFIED NOSE ASSEMBLY PART NUMBERS

Thread Size	Part No. For Complete Insert Nose Assembly	Part No. For Complete Stud Nose Assembly	Mandrel Socket Head Cap Screw
#4-40	4326700	—	4-40 x 1.25"
#6-32	3755100	—	6-32 x 1.5"
#8-32	3755500	4361900	8-32 x 1.5"
#10-24	3755900 (3)	4555100	10-24 x 2.25"
#10-32	3755900	4362000	10-32 x 2.25"
1/4-20	3756100	4362100	1/4-20 x 2.25"
1/4-28	3756100 (3)	—	1/4-28 x 2.25"
5/16-18	3756300	4362200	5/16-18 x 2.25"
5/16-24	3756300 (3)	—	5/16-24 x 2.25"
3/8-16	3756700	4772500	3/8-16 x 2.5"
3/8-24	3756700 (3)	—	3/8-24 x 2.5"
1/2-13	4361600	—	1/2-13 x 2.5"

(3) Use this nose assembly with properly sized socket head cap screw.

METRIC NOSE ASSEMBLY PART NUMBERS

Thread Size	Part No. For Complete Insert Nose Assembly	Part No. For Complete Stud Nose Assembly	Mandrel Socket Head Cap Screw
M3	3441100	—	M3 x 35
M4	3441200	3442300	M4 x 50
M5	3441300	3442400	M5 x 55
M6	3441400	3442500	M6 x 55
M8	3441500	3442600	M8 x 60
M10	3441600	4601900	M10 x 65
M12	3441700	—	M12 x 65

ATLAS® SPEED RATCHET TOOL

- Designed for installing nuts from #6-32 to 1/2-13 and M4 to M12.
- Tool comes complete with mandrels and nose pieces.
- Stroke: 0 to 0.28" / 0 to 7 mm.
- Tool weight: 2.43 lbs. / 1.1 kg.

Part numbers:
AERT-UN: Includes 10-32, 1/4-20, 5/16-18 and 3/8-16 mandrels and nose pieces.
AERT-MT: Includes M5, M6, M8 and M10 mandrels and nose pieces.

Thread Size	Anvil Part No.	Mandrel Part No.
#6-32	P00632	A00632S
#8-32	P00832	A00832S
#10-24	P001024	A001024S
#10-32	P001032	A001032S
1/4-20	P001420	A001420S
1/4-28	P001428	A001428S
5/16-18	P0051618	A0061618S
5/16-24	P0051624	A0051624S
3/8-16	P002818	A003816S
3/8-24	P003824	A003824S
1/2-13	P001213	A001213S

Thread Size	Anvil Part No.	Mandrel Part No.
M4	P00304-00	A00277-00
M5	P00308-00	A-00276-00
M6	P-00307-00	A00275-00
M8	P00306-00	A00274-00
M10	P00378-00	A00273-00
M12	P00377-00	A00272-00

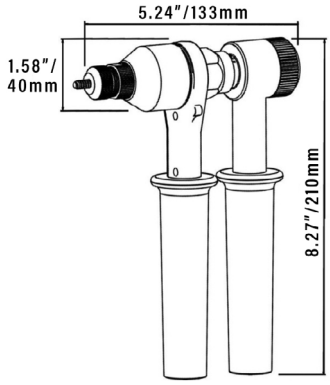

L-845/722 HEX WRENCH INSTALLATION TOOL

- Designed for installing SpinTite® and MaxTite® fasteners.
- Great for field installations or repair work.
- Ideal for prototype applications.
- Comes with hex key.

Model L-845 - Installs nuts #4-40 to 1/4" and M4 to M6

Model L-722 - Installs nuts 5/16" to 1/2" and M8 to M10

Thread Size	Complete Tool Part Number
#4-40	L-845-440
#6-32	L-845-632
#8-32	L-845-832
#10-24	L-845-1024
#10-32	L-845-1032
1/4-20	L-845-2520
1/4-28	L-845-2528
5/16-18	L-722-3118
5/16-24	L-722-3124
3/8-16	L-722-3716
3/8-24	L-722-3724
1/2-13	L-722-5013
1/2-20	L-722-5020

Thread Size	Complete Tool Part Number
M4	L-845-M4
M5	L-845-M5
M6	L-845-M6
M8	L-722-M8
M10	L-722-M10

L6000 INSTALLATION TOOL

- Ideal for light production requirements.
- Installs most SpinTite® fastener types and sizes.

Thread Size	Complete Tool Part Number
#4-40	L-6000-440
#6-32	L-6000-632
#8-32	L-6000-832
#10-24	L-6000-1024
#10-32	L-6000-1032
1/4-20	L-6000-2520
1/4-28	L-6000-2528

Thread Size	Complete Tool Part Number
M5	L-6000-M5
M6	L-6000-M6

PRESET IN-LINE PRESSURE REGULATOR

The in-line pressure regulator is designed to protect intermittently operated air tools against damage caused by over-pressurization. The regulator is preset at the factory for tamper-proof operation.

FEATURES

- Setting will not change due to vibration
- Compact size is lightweight and is designed to be part of the tool.
- Accurate factory setting eliminates need of gauge.
- In port screen helps filter out harmful debris.

Size	*PSI*	*Part number*
1/4"	*90 PSI*	*4214-90PS*
1/4"	*100 PSI*	*4214-100PS*

SPECIFICATIONS

Maximum Supply Pressure ..... 150 PSI
Operating Pressure Range ..... Preset
Maximum Operating Temp ..... 175˚ F
Material ..... Brass
Accuracy ..... ±2.5 PSI

Dimensions and Weights
Length ..... 2.88"
Diameter ..... 0.88"
Weight ..... 3 oz.

For more information on our installation tools and any troubleshooting questions, check our web site: www.pemnet.com

ATLAS® TOOL SELECTOR GUIDE

Various applications may affect ATLAS insert installation. We recommend this tooling guide be used as a reference only. Please contact our ATLAS Customer Service department with questions regarding your specific installation tooling requirements.

- *The installation tool can reliably install all material types.*
- *The installation tool is rated for Steel, Aluminum, MONEL®, and Brass.*
- *The installation tool conditions must be optimal for reliable installation.*
- *This combination of tool and insert is not recommended.*
- *This is the best tool to use with this insert and thread size.*

SpinTite® Inserts

Insert Type	Thread Size	AE801 AE901 AE911	AE802 AE902 AE911	AE803 AE903 AE912	AE804 AE904 AE913	AE806	AE808	RIV938P	RIV939P	RIV912 RIV949	RIV942	RIV998V	RIV938S	RIV916	RIV916B	RIV990	RIV991
AEL, AEK AEH, AEO AET, AEW	#4-40, M3																
	#6-32																
	#8-32, M4																
	#10, M5																
	1/4", M6																
	5/16", M8																
	3/8", M10																
	M12																
	1/2"																

Stud Series Inserts

Insert Type	Thread Size	AE801 AE901 AE911	AE802 AE902 AE911	AE803 AE903 AE912	AE804 AE904 AE913	AE806	AE808	RIV938P	RIV939P	RIV912 RIV949	RIV942	RIV998V	RIV938S	RIV916	RIV916B	RIV990	RIV991
AES	#4-40, M3																
	#6-32																
	#8-32, M4																
	#10, M5																
	1/4", M6																
	5/16", M8																
	3/8", M10																

Plus+Tite® Inserts

Insert Type	Thread Size	AE801 AE901 AE911	AE802 AE902 AE911	AE803 AE903 AE912	AE804 AE904 AE913	AE806	AE808	RIV938P	RIV939P	RIV912 RIV949	RIV942	RIV998V	RIV938S	RIV916	RIV916B	RIV990	RIV991
Straight Shank	#10, M5																
	1/4", M6																
	5/16", M8																
	3/8", M10																
Pre-bulbed	#10, M5																
	1/4", M6																
	5/16", M8																
	3/8", M10																

MaxTite® Inserts

Insert Type	Thread Size	AE801 AE901 AE911	AE802 AE902 AE911	AE803 AE903 AE912	AE804 AE904 AE913	AE806	AE808	RIV938P	RIV939P	RIV912 RIV949	RIV942	RIV998V	RIV938S	RIV916	RIV916B	RIV990	RIV991
AE	#4-40, M3																
	#6-32																
	#8-32, M4																
	#10, M5																
	1/4", M6																
	5/16", M8																
	3/8", M10																
	M12																
	1/2"																

ATLAS® FM™ Inserts

Insert Type	Thread Size	AE801 AE901 AE911	AE802 AE902 AE911	AE803 AE903 AE912	AE804 AE904 AE913	AE806	AE808	RIV938P	RIV939P	RIV912 RIV949	RIV942	RIV998V	RIV938S	RIV916	RIV916B	RIV990	RIV991
AEFR, AETR AEFK, AETK AEFH, AETH AEFHH, AETHH, AECR, AECK AETHC	#4-40, M3																
	#6-32																
	#8-32, M4																
	#10, M5																
	1/4", M6																
	5/16", M8																
	3/8", M10																
	M12																
	1/2"																

NAS PART NUMBER KEY

NAS1329 S 5E KB 125 L

Thread locking feature. Available on alloy steel (see material and finish code "H" below).

Grip range. See pages 28 and 30. The number shown is the max grip in thousands of an inch.

Code	Key	Thread End
–	No	Open
K	Yes	Open
B	No	Closed
KB	Yes	Closed

Thread Code:

04 = #4-40
06 = #6-32
08 = #8-32
3E = #10-24
3 = #10-32
4E = 1/4-20
4 = 1/4-28
5E = 5/16-18
5 = 5/16-24
6E = 3/8-16
6 = 3/8-24
8E = 1/2-13
8 = 1/2-20

NAS Material and Finish Code: (ATLAS material and finish see page 33)

A = Aluminum alloy, anodized per MIL-PRF-8625 Type II, Class I
S = Carbon steel, cadmium plated per SAE AMS-QQ-P-416 Class II, Type II
Z = Carbon steel, zinc plated per ASTM B 633, FE/ZN 5, Type II
H = Alloy steel, cadmium plated per SAE AMS-QQ-P-416 Class II, Type II
C = Type 430 CRES material, pickled and passivated per AMS2700, Method I, Class 4
N = Type 316 CRES material, pickled and passivated per AMS2700, Method I, Class 4
G = Brass, no additional finish

NAS1329 = Flathead (see page 30)
NAS1330 = Countersunk head (see page 28)

ATLAS® SpinTite® PART NUMBER KEY

AE L S 8 - 420 - 165 B W

W is for wedge head.

B here indicates closed end thread, **S** indicates sealant under the head[1], **BS** is closed end w/sealant under head, **NW** indicates no wax, **blank** is open end. **Numbers preceeded by a dash** in this position is the nominal stud length when installed in max grip. For parts with Unified threads, the number shown is the max grip in thousands of an inch. For parts with Metric threads, the number shown is the max grip in millimeters.

Grip Range Code:
For parts with Unified threads, the number shown is the max grip in thousands of an inch. For parts with Metric threads, the number shown is the max grip in millimeters.

Thread Code: See Thread Code Comparison Chart on page 55. Can also be used to determine if part is SpinTite® or MaxTite®/Plus+Tite®. Thread acceptability per gaging system 21 prior to installation.

Finish Code Number:
None = No finish
2 = Cadmium and clear chromate (standard on type T, but not shown)
3 = Zinc Nickel (Silver color) (RoHS compliant)
4 = Zinc Nickel (Black color) (RoHS compliant)
5 = Zinc and black chromate (RoHS compliant)
6 = Tin plate (RoHS compliant)
7 = Cadmium and yellow chromate
8 = Zinc and yellow chromate (RoHS compliant)
(standard on all but AET and AEO). For AES leave blank.
9 = Tin/zinc plate (RoHS compliant)
10 = Zinc and clear chromate (standard on AEO) (RoHS compliant)

Material Code:
S = Steel
A = Aluminum
B = Brass
M = MONEL® alloy 400 (AEL and AEK only)
C = Stainless Steel (AEL and AEK only)

Head and Shank Type Code
K = Round ribbed shank, minimum-profile head
L = Round ribbed shank, low-profile head
H = Half hex shank, low-profile head
O = Thin wall, smooth round shank, low-profile head
T = 360˚ swaging, low-profile head
S = Externally threaded stud installed into AEL insert
W = 360˚ swaging diamond knurl

All ATLAS® part numbers begin with AE for **A**TLAS **E**ngineering.

(1) Sealant under head can reduce the effective grip range of the insert by .020" - .030" (0.5 - 0.76 mm).

MONEL® is a registered trademark of Special Metals Corporation.

ATLAS® FM™ PART NUMBER KEY

AE F K S - M4 - 3.0 B ZI

Finish Code:
ZI - RoHS compliant zinc clear per ASTM B 633, Fe/Zn 8, Type V
ZC - RoHS compliant zinc yellow per ASTM B 633, Fe/Zn 8, Type VI
ZN - Zinc Nickel

B here indicates closed end thread.
S here indicates sealant under the head. (1)

Grip Range Code:
The number shown is the max grip in millimeters.

Thread Code. Unified threads available on special order.

Material Code:
C = 300 Series Stainless Steel (Limited availability. Call for more info)
S = Low Carbon Steel (Standard)
B = Alloy No. 260 Brass (Available on special order)
A = 6053-T4 or 6061-T4 Aluminum (Available on special order)

Body Type:
H = Half hex shank
R = Round, smooth
K = Round, knurled
HH = Full hex shank, round counterbore

Head Style:
F = Flat
T = Thin
C = Countersunk

All ATLAS® part numbers begin with AE for **A**TLAS **E**ngineering.

(1) Sealant under head can reduce the effective grip range of the insert by .020" - .030" (0.5 - 0.76 mm).

ATLAS® MaxTite® PART NUMBER KEY

AE S 25 KB 151 CSI

Finishes:

NO SUFFIX

- Cadmium and clear chromate (standard on Steel)
- Anodized (standard on Aluminum)
- Passivated and/or tested per ASTM A380 (standard on Stainless Steel)
- No additional finish (standard on Brass)
- Cadmium and yellow chromate (standard on Alloy Steel)

CSI = Cadmium and yellow hexavalent chromate
ZN = Zinc and clear hexavalent chromate (inactive for new designs)
ZY = Zinc and hexavalent yellow chromate (inactive for new designs)
ZNR = Zinc and clear trivalent chromate (RoHS compliant)
ZYR = Zinc and trivalent yellow chromate (RoHS compliant)
ZNB = Zinc Nickel (Black color)

Grip Range and MaxTite® Head Style Code:

For parts with Unified threads, the number shown is the max grip in thousands of an inch. For parts with Metric threads, the number shown is the max grip in millimeters. Grip range codes ending with a 0 or 5 indicate a flathead product. Grip range codes ending with a 1 or 6 indicate a countersunk head product. All Plus+Tite inserts have a flat head, regardless of last character of grip range code.

Key/No Key, Thread End Type and Shank Type Code per table below:

Code	Key	Thread End	Shank Type
–	No	Open	Smooth round
K	Yes	Open	Smooth round
B	No	Closed	Smooth round
KB	Yes	Closed	Smooth round
R	No	Open	Ribbed round
H	No	Open	Full-hex body

Thread Code: See Thread Code Comparison Chart on page 55. Can also be used to determine if part is SpinTite® or MaxTite®. Thread acceptability per gaging system 21 prior to installation.

Material Code:

S = Steel
A = Aluminum
NM = 300 Series stainless steel (**N**on **M**agnetic)
SS = Type 430 stainless steel
BR = Brass
CH = 4037 Alloy Steel

All ATLAS® part numbers begin with AE for **A**TLAS **E**ngineering.

THREAD CODE COMPARISON CHART

	Common Industry Standard	Alternate Industry Standard	ATLAS® SpinTite® Thread Code	ATLAS® MaxTite®/ Plus+Tite® Thread Code
UNIFIED	#4-40	.112 - 40	440	4
	#4-48	.112 - 48	448	448
	#5-40	.125 - 40	540	5
	#5-44	.125 - 44	544	544
	#6-32	.138 - 32	632	6
	#6-40	.138 - 40	640	640
	#8-32	.164 - 32	832	8
	#8-36	.164 - 36	836	836
	#10-24	.190 - 24	1024	1024
	#10-32	.190 - 32	1032	10
	#12-24	.216 - 24	1224	12
	#12-28	.216 - 28	1228	1228
	1/4-20	.2500 - 20	420	25
	1/4-28	.2500 - 28	428	2528
	5/16-18	.3125 - 18	518	31
	5/16-24	.3125 - 24	524	3124
	3/8-16	.3750 - 16	616	37
	3/8-24	.3750 - 24	624	3724
	7/16-14	.4375 - 14	714	43
	7/16-20	.4375 - 20	720	4320
	1/2-13	.5000 - 13	813	50
	1/2-20	.5000 - 20	820	5020
	5/8-11	.6250 -11	1011	—
	5/8-18	.6250 - 18	1018	—
	3/4-10	.7500 - 10	1210	—
	3/4-16	.7500 - 16	1216	—
METRIC	M3 x 0.5	—	350	M3
	M3.5 x 0.6	—	3560	M3.5
	M4 x 0.7	—	470	M4
	M5 x 0.8	—	580	M5
	M6 x 1	—	610	M6
	M8 x 1.25	—	8125	M8
	M8 x 1	—	810	Special
	M10 x 1.5	—	1015	M10
	M10 x 1.25	—	10125	Special
	M10 x 1	—	1010	Special
	M12 x 1.75	—	12175	M12
	M14 x 2	—	1420	M14
	M16 x 2	—	1620	M16

SUGGESTED ASSEMBLY TORQUE VALUES TO PRODUCE CORRESPONDING BOLT LOADS

Thread Size		SAE Grade 5 Bolts					
		Clamp Load		Assembly Torque			
				Dry		Plated	
(Unified)	(Metric)	(lbs.)	(kN)	(in. lbs.)	(N•m)	(in. lbs.)	(N•m)
#4-40	M3	380	1.69	8	0.9	6	0.68
#6-32	—	580	—	16	—	12	—
#8-32	M4	900	4	30	3.39	22	2.49
#10-24	—	1120	—	43	—	32	—
#10-32	M5	1285	5.7	49	5.54	36	4.07
1/4-20	—	2000	—	96	—	75	—
1/4-28	M6	2300	10.22	120	13.56	86	9.72
5/16-18	—	3350	—	204	—	156	—
5/16-24	M8	3700	16.44	228	25.4	168	18.98
3/8-16	—	4950	—	360	—	276	—
3/8-24	M10	5600	24.89	420	47.46	300	33.9
1/2-13	—	9000	—	900	—	675	—
1/2-20	M12	10200	45.37	1020	115.2	765	86.4

METRIC CONVERSIONS

LINEAR

Multiply INCHES	by 25.4	to get MILLIMETERS (mm)
Multiply MILLIMETERS (mm)	by .03937	to get INCHES
Multiply INCHES	by 2.54	to get CENTIMETERS (cm)
Multiply CENTIMETERS (cm)	by .3937	to get INCHES

TORQUE

Multiply INCH-POUNDS	by 0.11298	to get NEWTON-METERS (Nm)
Multiply NEWTON-METERS (Nm)	by 8.851	to get INCH-POUNDS
Multiply FOOT-POUNDS	by 1.3558	to get NEWTON-METERS (Nm)
Multiply NEWTON-METERS (Nm)	by 0.7376	to get FOOT-POUNDS

FORCE

Multiply POUNDS	by .00445	to get KILONEWTONS (kN)
Multiply KILONEWTONS (kN)	by 224.72	to get POUNDS

PRESSURE

Multiply PSI	by .069	to get BARS
Multiply BARS	by 14.5	to get PSI

DECIMAL EQUIVALENTS OF STANDARD GAUGE SHEET ALUMINUM AND SHEET METAL

No. of Gauge	Gauge		No. of Gauge	Gauge		No. of Gauge	Gauge	
	Alum. (B&S)	Steel (US Std.)		Alum. (B&S)	Steel (US Std.)		Alum. (B&S)	Steel (US Std.)
10	.1019	.1345	17	.0453	.0538	24	.0201	.0239
11	.0907	.1196	18	.0403	.0478	25	.0179	.0209
12	.0808	.1046	19	.0359	.0418	26	.0159	.0179
13	.0720	.0897	20	.0320	.0359	27	.0142	.0164
14	.0641	.0747	21	.0285	.0329	28	.0126	.0149
15	.0571	.0673	22	.0253	.0299	29	.0113	.0135
16	.0508	.0598	23	.0226	.0269	30	.0100	.0120

All ATLAS® products meet our stringent quality standards. If you require additional industry or other specific quality certifications, special procedures and/or part numbers are required. Please contact your local sales office or representative for further information.

Regulatory compliance information is available in Technical Support section of our website. Specifications subject to change without notice. See our website for the most current version of this bulletin.

PennEngineering®

North America: Danboro, Pennsylvania USA ▪ E-mail: info@pemnet.com ▪ Tel: +1-215-766-8853 ▪ 800-237-4736 (USA)
Europe: Galway, Ireland ▪ E-mail: europe@pemnet.com ▪ Tel: +353-91-751714
Asia/Pacific: Singapore ▪ E-mail: singapore@pemnet.com ▪ Tel: +65-6-745-0660
Shanghai, China ▪ E-mail: china@pemnet.com ▪ Tel: +86-21-5868-3688

Visit our PEMNET™ Resource Center at www.pemnet.com ▪ Technical support e-mail: techsupport@pemnet.com